University of Cincinnati
College of Engineering and Applied Science
Department of Mechanical & Materials Engineering
MECH5051/5052 Senior Design

Aquatic Robot for Underwater Exploration

Benjamin Ambos, Alec Hjelle, Sarah Hutchins, Jonathon Jansen, Seth Roetenberger

April 2024

Project Sponsor: Innovation Challenge (CEAS Tribunal)

Table of Contents

Executive Summary 3
Introduction/Overview 4
Purpose 4
Specific Objectives 4
Scope and Limits and Criteria 4
Existing Work/Competition 4
Research and Engineering Codes 6
Applicable Engineering Concepts 6
Codes and Standards 7
Constraints 8
Waterproofing 8
Manufacturability 8
Environmental/ Ethical 8
Specifications 8
Health and Safety 8
Project Management/Schedule 9
Project Schedule 9
Project Budget and Bill of Materials 10
Hardware Design 11
Conceptual Hardware Design & Changes 11
Summary and Conclusions 24
Future Work/Subsequent Development 25
References 25
Appendices 26
Calculations 26
Drawings 27
Hour Log 35
Pi Code 42

Executive Summary

The Aquatic Robot for Underwater Exploration (ARUE) was developed to create an accessible way for people to monitor underwater environments. The priority of accessibility is emphasized not only through the final cost of the product, but also the design and manufacturing of the robot. The design of ARUE was centered around monitoring an underwater environment while being as minimally invasive as possible and as cost efficient to manufacture. This was aimed to be achieved through a unique approach at propulsion and manufacturing. Many underwater monitoring products feature propellers or large metal chassis that are highly disturbing to wildlife. The use of a hydraulic actuating fish reduces the disturbances, providing a minimally invasive solution to underwater research methods.

During the brainstorming phase of the project, the conceptual design of the robot included certain aspects that would be favorable to data collection, such as sensors, cameras, and necessary motors. As the early stages of the project continued, a few aspects that were wanted were too ambitious for the timeline and budget, adding constraints where they weren't needed. The evolution of the conceptual design was refined with more realistic goals of a moving fish that could perform simple maneuvers, with the eventual capability to expand on the ability of the fish.

The design and manufacturing phases of the project aligned nearly to the original Gantt Chart, with a few extensions needed for several parts that proved difficult. With the largest constraint of the design being the underwater nature of the robot, codes and standards were followed to achieve the water-tightness needed to ensure not only the safety of the electronics and robot, but also the environment and people around the robot. The largest aid in designing around this constraint was the use of 100 percent infill parts that were additively manufactured. This allowed for water to not enter through the material itself, causing the only points of leakage to be the connection points. This was remedied by the use of compliant O-rings where fasteners are present, but also custom laser-cut gaskets between large connection points to ensure a water-tight frame. Lastly, the remaining challenge and constraint toward the end of the project was the ability of the gear pump. After much testing and many redesigns, the current gear pump is outputting flow that is 46 percent of the expected value. This number could grow if the gear pump materials were to change.

The final prototype of ARUE achieves a water-tight and close to neutrally buoyant structure, that can move slowly through calm, fresh water. Although the speed and maneuverability of the robot has not yet met the original goals, there are a few paths that could reach or surpass these goals.

Introduction/Overview

Purpose

The purpose of the design project is to create an underwater exploration robotic fish which can be used to research shallow underwater environments allowing researchers to easily receive various underwater details while camouflaging into the environment without disturbing the environment. The robot will be able to take video recordings over its environment while also taking temperature and pressure readings of its environment. This product sets itself apart by being much more accessible than current products, that are not only very expensive, but are very intricate. Additionally, the propulsion system of ARUE aims to be quieter and less disturbing than the current products on the market.

Specific Objectives

The objective is to create a working robotic fish which can navigate its way through water while also taking in different parameters of its environment. It will be able to record video surveillance, take temperature readings, record accelerometer data and pressure readings of its environment.

Scope and Limits and Criteria

The scope of the project is to create a single working prototype which can swim side to side, as well as up and down, and record said parameters. The design of the project is limited to the build plate of a home 3D printer and student resources and a budget of $500, to be completed by April 9th, the date of the senior design expo, to be presented to the College of Engineering.

Existing Work/Competition

The Earth's Ocean is a subject of many challenges when it comes to exploring the extreme pressures, temperatures, and terrain of its floor. In efforts to explore such areas, large metallic robots have been used to sustain such environments, however, recent studies have undergone inspiration from marine life which is already able to sustain these conditions. In addition, these robots also have the potential to blend into their environments much better than the contemporary, "human piloted and remote controlled" robots such as the Deepsea Challenger or Hercules. They can also be used to help research the aspects which are negatively impacted by climate change, pollution, and other threats posed to the ecosystems in the ocean.

Many soft, bio-inspired robots have already made their way into the being tested and engineered to work in the ocean. The squid-bot, SoFI, the fish-bot, and the "chimeric crab-octopus", are just a few examples of bio-inspired robots. All these robots are just the beginning of bio-inspired robots. Mechanisms for actuating, controlling, and gripping, are all being modified to more accurately mimic and portray the creature they are inspired by.

This project aims to take the concepts of bio-inspired robots, and soft robots as well as different engineering principals to create a robot which is inspired by the basic construction of a fish, whilst also gathering data which can be used by its user for research purposes.

Current dominating research methods outside of robotics includes invasive, strictly data-based tagging methods, all of which have caused migration changes as well as behavior changes in the fish schools. The difference with this robotic fish, is it provides a noninvasive method for

collecting data. It will mimic the fish in its environment and will not disturb the underwater life like propeller like underwater robots which are used today.

Research and Engineering Codes

Applicable Engineering Concepts

Buoyancy

To achieve a near-neutrally buoyant product, precise values of density and center of mass are needed. To determine where weight needs to be added to reduce buoyancy, or air pockets to increase buoyancy, an excel spreadsheet defining densities and volumes was used, see ***Calculations 1: Buoyancy Calculation Sheet***.

$$\textbf{\textit{Density}} = \frac{Mass}{Volume}$$

Equation 1: Density

Given the total volume is 3431259.842 mm^3 with a mass of 3.07 kg the density was calculated to be 8.94E-7 $\frac{kg}{mm^3}$.

Gear Pump/Hydraulics

The gear pump sizing was determined by the available space in the body cavity of the fish. The shell of the gear pump was chosen to be just large enough to fit in the space, as a larger gear pump would allow for the fluid to be transferred easier. To determine to gear sizing in the gear pump, Equation 2 was used. This equation relates the properties of the gear pair to the volume displaced by one full rotation. Equation 2 was then manipulated to solve the ideal gear width, as this was the only variable dimension in the gear pump. This equation was then plotted to determine the ideal width of the gear.

$$Displaced\ Volume = (Outer\ Diameter^2 - Gear\ Root\ Diameter^2) * Gear\ Width * \pi/4$$

Equation 2: Gear Pump Displacement Equation

Theoretical calculations were found to be 16.49 mL/rotation, at 550 rpm results 151.16 mL/sec.

Servo Selection (Torque Calculation)

The rotation of the servo motors needs to be able to sustain the torque created through the movement through water with the weight of the fish. In the following calculation, the pectoral fins (driven by the servos) are assumed to be perfect triangles for simplicity, and a safety factor of 2 is used. The position of the servo attaching to the fin is off-center and increases the torque required. The standard equation for torque is, $T = \frac{11*Pressure*Area*Base*Safety\ Factor}{15}$, which can be manipulated to the equation below:

$$T = \frac{11 * Base * Area * Density * Velocity^2 * Safety\ Factor}{30}$$

Equation 3: Torque Calculation for Pectoral Servos

$$T = 0.8976\ Nm = 9.15\ kg_t\ cm$$

Equation 4. Servo Torque Value

- Given these calculations, a servo at 12kg was chosen for the robot fish.

Codes and Standards

Material and General Standards & Codes

ISO Metric Threads (ISO 68-1): Standard for metric screw threads, including specifications for thread dimensions and tolerances for fasteners used in various applications, including water environments.

ASTM D790: Standard test methods for flexural properties of unreinforced and reinforced plastics and electrical insulating materials, applicable for evaluating the flexural strength and modulus of 3D printed PLA specimens.

ISO 527: Plastics - Determination of tensile properties, offering an international standard for determining the tensile properties of plastics, applicable to PLA filament and printed parts.

NEC (National Electrical Code): While not specific to water environments, the NEC provides guidelines for electrical wiring and equipment installation, including those used in potentially damp or wet locations. Compliance with NEC requirements ensures electrical safety.

UL 746D: Safety standards for polymeric materials used in electronic equipment, including considerations for water immersion.

IP Code (Ingress Protection): The IP Code, defined by international standard IEC 60529, classifies and rates the degree of protection provided against the intrusion of solid objects (like dust) and water. For example, an IP67 rating indicates the device is dust-tight and can withstand immersion in water up to 1 meter deep for 30 minutes.

NEMA MG-1: Motors and Generators. This standard by the National Electrical Manufacturers Association (NEMA) provides guidelines for the design and performance of electric motors, including those used to drive water pumps.

Sensor Standards & Codes

ISO 9847: Temperature sensors - Platinum resistance temperature sensors, which provides specifications for platinum resistance temperature sensors (PRTs) used in industrial and scientific applications.

ANSI/ISA-75.13: Guidelines for Calibration of Temperature Measurement and Control Instruments, which provides guidelines for the calibration of temperature sensors and instruments used for temperature measurement and control in industrial processes.

IEEE 2700-2014: Standard for Sensor Performance Parameter Definitions - This standard provides definitions and guidelines for specifying sensor performance parameters, which can be useful for evaluating the performance of underwater pressure sensors.

Environmental Standards and Codes:

EPA: The EPA does not have "codes," however, there are guidelines and regulations, highlighted below:

- Clean Water Act (CWA)
- Safe Drinking Water Act (SDWA)
- Environmental Impact Assessment (EIA)

Constraints

Waterproofing

Being that this product operated under water, the design and manufacture of the robot needs to be able to be waterproofed, as well as be able to withstand water pressures similar to those experienced in the operating environment. This constraint was the most important one for the design of the product, with every part of the final product taking this constraint into account, as even interior parts worked with dynamic fluid.

Manufacturability

Other constraints to the project were the available manufacturing resources available as well as the budget. The team was limited to the amount of money that was available to pay for all iterations of designs and the 3D printers which were available to use for producing the designs to test and assemble. Time was also a constraint. Given how ambitious the project was, and the time frame, only about 8 months total, there was a very limited time to get through the entirety of the design, manufacturing, and testing phases of creating the robot fish. This also influenced the manufacturing type, as the need for quick turnaround time for 3D prints was needed.

This goal and standard then created its own constraint, where the capabilities of 3D printed parts needed to be assessed and designed around. For example, the gear pump being additively manufactured out of PLA (Polylactic Acid) created a constraint of pump efficiency, that also needed accounting during the life of the design.

Environmental/ Ethical

The robot had to house all the electronics which would control the fish. This meant it had to be waterproof, preventing water from leaking into the fish, where the electronics were, as well as from leaking out from the water chambers within the tail. Grease within the gear pump also needed to stay within the tail of the fish, and not leach out into the ocean. Other environmental and ethical constraints included maintaining a minimally invasive robot fish that would camouflage into its environment. The fish was not to cause any harm to the wildlife environment it would be surrounded by. the goal was to decrease the

Specifications

Specific constraints included utilizing fluid dynamics for the overall shape of the fish and for the actuation system, being a hydraulically actuated driven system. The fish also needed to be neutrally buoyant, to prevent the fish from sinking or floating in the water. Using NX to obtain the total volume of the fish, and density calculations, the buoyancy of the fish was calculated to sink in the tail section and is too buoyant in the body section. These calculations were proved correct in our initial buoyancy test and were sought to be corrected.

Health and Safety

Considerations toward possible electric shock from the electronics was considered when designing the data collection method. The design intended for a safe way of removing the data from the internals of the fish using Wi-Fi without having to open the fish.

It should be noted that sustainability was not a constraint considered in the design. There would not be any emissions or long-term damage to the ecosystem in the creation of the product.

Project Management/Schedule

Project Schedule

The project schedule was compiled using a Gantt chart to gauge deadlines and the timing of completing tasks to as to meet the final project deadline. Below is a sample image of the Gantt chart. For each section of the project, a task was designated a person(s) to work on it, the start date, as well as the end date, and the progress line would be continually updated as the project went on. The tasks, as shown below, were organized in a start, middle, and end timeline. The initiation phase was all the initial design work, as well as the research, the middle included all the modeling, purchasing of materials, coding, testing, etc. And finally, the final assembly, report and other presentation materials are scheduled.

The different tasks were assigned to those who had the skill set to do them as well as those who were wanting to learn a new skill. Additionally, weekly meetings were used to designate and schedule new tasks on a weekly basis as well as update the team on progress, changes, and questions.

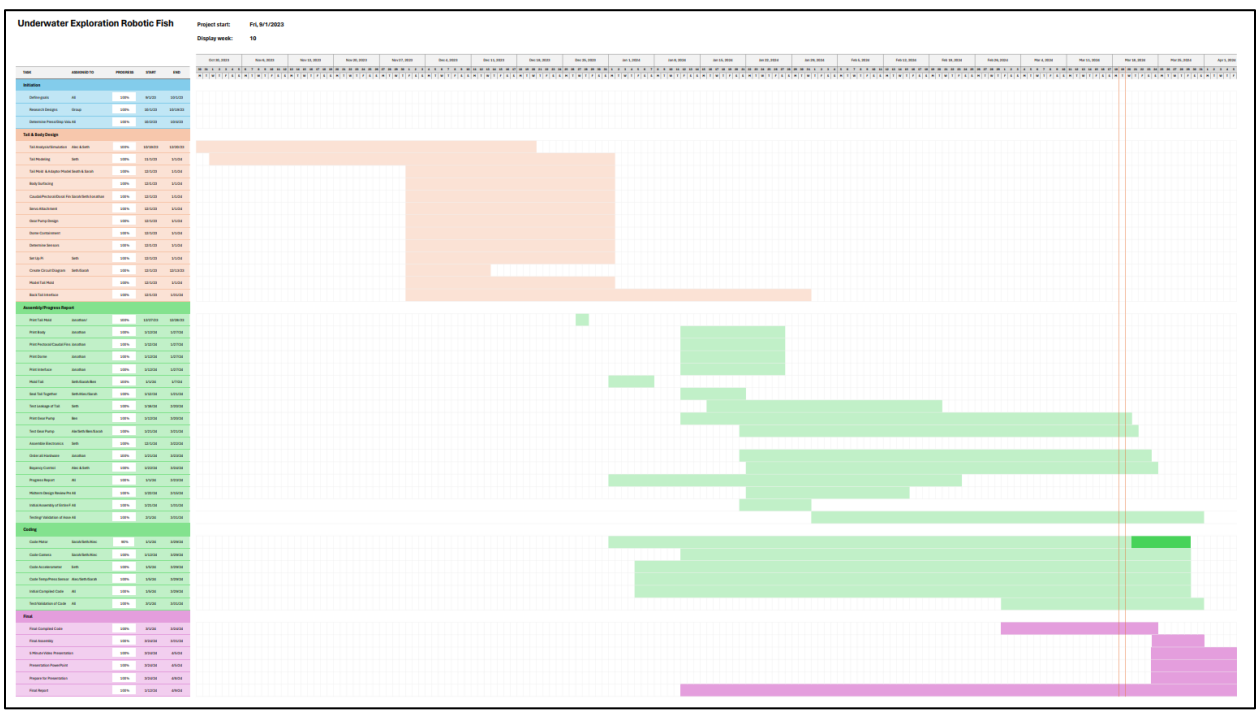

Figure 1: Project Gantt Chart

Project Budget and Bill of Materials

Below is the bill of materials list, with all the materials needed for the assembly of the fish, as well as the cost, who purchased it, and the total cost. The initial budget of the project was $500, a total of $100 per person. This budget was then reassessed due to additional money being received through the innovation challenge, as well as the ability to have materials purchased through the university. The updated budget of the project was modified to $1000 total. The product itself was finalized to cost just under 300$ including all electronics, the silicone, as well as the PLA filament to fully manufacture the system.

Aspect of Robot	Part	Quantity	Priority	Purchaser	Option 1 Description	Option 1 Cost	Amount Spent
Tail	Resin	1	Low	Pre-owned		0	$ -
	Silicone	1	High	Seth	https://www.amazon.com/dp/B0C8HPX8RL?psc=1&ref=ppx_yo2ov_dt_b_product_details	21.99	$ 21.99
	ALECPEA 30g Silicone Glue	1		Sarah	https://www.amazon.com/gp/product/B0CHJND26L/ref=ppx_od_dt_b_asin_title_s00?ie=UTF8&th=1	9.99	$ 9.99
	Dissolvable PLA	1		Sarah	https://www.amazon.com/gp/product/B0BCVLLC3P/ref=ppx_yo_dt_b_asin_title_o00_s00?ie=UTF8&psc=1		$ 39.88
	Silicone	1		Seth			$ 49.99
	Silicone	1		Sarah	https://www.amazon.com/dp/B0C8HPX8RL?psc=1&ref=ppx_yo2ov_dt_b_product_details	21.99	$ 21.99
Fins	Servo	2		Pre-owned			$ -
	shaft seals	1 pk 5	Med	Seth	https://www.aliexpress.us/item/3256803576029446.html?spm=a2g0o.order_list.order_list_main.5.374a1802MH3RP7&ga	11.05	$ 11.05
	shoulder bolts	1 pk 5	Low	Seth	https://www.aliexpress.us/item/3256801511696191.html?spm=a2g0o.order_list.order_list_main.11.21ef18021NLhXu&ga	7.26	$ 7.26
							$ -
Mechanics	Gear Pump Motor	1	High	seth		44	$ 44.00
	Battery		Low				
	Tolako 5v Relay Module	1		Sarah	https://www.amazon.com/dp/B00VRUAHLE?psc=1&ref=ppx_yo2ov_dt_b_product_details	5.49	$ 5.49
Body	PLA filament	1		Jonathan	https://www.amazon.com/gp/product/B0CK9FGX6G/ref=ppx_yo_dt_b_asin_title_o00_s00?ie=UTF8&psc=1+	28.02	$ 28.02
	Body/Tail Adaptor Bolts M4x0.7x50mm (91292A140)	1 pk 25			https://www.mcmaster.com/91292A140/	7.22	$ 7.22
	Nylon Flat Washers	1 pck of 50		Sarah	https://www.amazon.com/dp/B07N56FY6H?psc=1&ref=ppx_yo2ov_dt_b_product_details	5.49	$ 5.49
	Rails for balancing	1: 2pcs		Sarah	https://www.amazon.com/dp/B082ZNXYMG?psc=1&ref=ppx_yo2ov_dt_b_product_details	6.49	$ 6.49
Head	Pressure Sensor	1	Med	Seth	https://www.amazon.com/Pressure-Transducer-Sender-Connector-Stainless/dp/B0BM6B6B73/ref=pd_sbs_sccl_4_1/135-9	16.89	$ 16.89
	Temp Sensor	1	Med	Seth	https://www.amazon.com/Gikfun-DS18B20-Temperature-Waterproof-EK1083x3/dp/B012C597T0/ref=sr_1_3?crid=23PKIM	11.58	$ 11.58
	Pi Zero 2 w	1		Pre-owned		0	$ -
	Pi Camera	1		Pre-owned		0	$ -
	Microphone Amp	1	High	Seth	https://www.amazon.com/Eujgoov-Microphone-Amplifier-Sensor-Raspberry/dp/B085LM3VXY/ref=sr_1_2?crid=3C93ELI4Z	5.56	$ 5.56
	ULtrasonic Transducer	1 pk 5	High	Seth	https://www.amazon.com/dp/B00M2GH9547psc=1&ref=ppx_yo2ov_dt_b_product_details	9.39	$ 9.39
	Clear dome		High	Seth	https://www.amazon.com/dp/B0BDC9FMDL?psc=1&ref=ppx_yo2ov_dt_b_product_details	8.47	$ 8.47
	Button 12v, 5v	2	High	Seth	https://www.electric-b2c.com/products/8mm-waterproof-latching-metal-push-button-switch-light-shine-car-horn-fix-3?_p	5.4	$ 10.80
	MCP3008	1		Seth	https://www.adafruit.com/product/856	9.58	$ 9.58
	Voltage regulator	1	Low	Pre-owned		0	$ -
	Camera Bolt Circle O-Rings	1 pk 20			https://www.amazon.com/20PCS-Cushioning-Valve-Rubber-Section/dp/B00MJSYUTI/ref=sr_1_6?keywords=m3+o%27ring	5.49	$ 5.49
	Camera O-Ring	1 pk 25			https://www.mcmaster.com/9262K11	9.04	$ 9.04
	Underwater Thrusters			Sarah	https://a.co/d/byuCYiV	26.34	$ 26.34
	Lipo Battery Graphene			Sarah	https://a.co/d/66hgIEE	30.59	$ 30.59
	10Pc Aluminum Round Rods			Sarah	https://a.co/d/bU67VW9	11.99	$ 11.99
							$ -
Controller	Ultrasonic Speaker	1 pk 2	Low	Seth	https://www.amazon.com/dp/B09L7LHZML/?coliid=I2F8UEU7QVHQS0&colid=2PLDMF0RQFXCW&psc=1&ref_=list_c_wl_l	6.99	$ 6.99
	Amp	1		Pre-owned		0	$ -
	Micro Controller	1		Pre-owned		0	$ -
	Voltage regulator	1	Low	Pre-owned		0	$ -
							$ -
Bolts/Orings/Etc			Some Extra		Actually ordered:		$ -
	BOLT M4 x 14mm SST (head/torso cnct)	14	16	Jonathan	MS2530016A40000	3.19	$ 3.19
	BOLT M3 x 14mm SST (Camera dome)	6	8	Jonathan	92290A118	6.68	$ 6.68
	M3 THREADED INSERT (Camera dome)	6	8	Jonathan	https://www.amazon.com/Threaded-Inserts-Printing-Knurled-Automotive/dp/B0BVMMBG2N/ref=sr_1_3?crid=3M2M2DY	6.99	$ 6.99
	ORING 25.5mm ID 3mm width (Camera Dome)	1	1	Jonathan	9262K11	9.04	$ 9.04
	BOLT M4 x 20mm SST (Servos)	8	10	Jonathan	MS2530020A40000	2.21	$ 2.21
	BOLT m4 x 55mm SST (gear pump)	8	10	Jonathan	92290A855	15.75	$ 15.75
	ORING 16mm ID 2mm width (oval interface plate)	2 (maybe 4)		Jonathan	1295N241	5.02	$ 5.02
	ORING 78mm ID 3.5mm width (gear pump lid)	1		Jonathan	1302N649	6.96	$ 6.96
	ORING 105mm ID 2mm width (body/head interface)	1		Jonathan	9262K871	8.41	$ 8.41
	BOLT M4 x 8mm SST (rail)	3	5	Jonathan	MS2530008A40000	0.85	$ 0.85
	BOLT M4 x 10mm SST (rail) (JUST IN CASE)	3	5	Jonathan	MS2530010A40000	0.87	$ 0.87
					Fastenal Shipping	19.46	$ 19.46
	mcmaster order			seth		70	$ 70.00
					McMaster Shipping	tbd	tbd
						Total	$ 421.57
						Individual Costs	$ 84.31

Figure 2: Bill of Materials

Hardware Design

Conceptual Hardware Design & Changes

Body

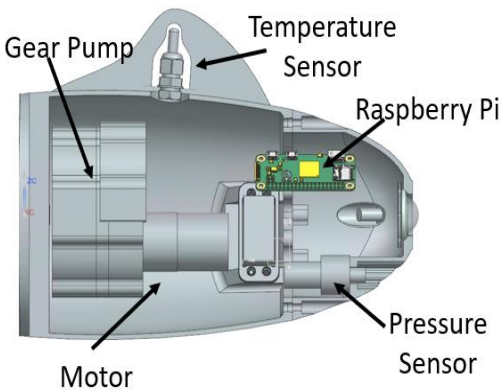

Figure 3: Final Design and Layout of the Head & Body

A basic fish body design was chosen out of simplicity and ease of compiling electronics and designing for the tail and body. The body of the fish will be used to house the electronics and the propulsion mechanism. The initial design of the body primarily focused on size and shape, with detailed changes being made to accommodate for motor, sensor, and pcb placement. The body shell was designed to be 3D printed, which creates a constraint on size and density of the body and head. The build envelope of the printer used was: 450mm x 450mm x 470mm, providing two options, either splitting the manufacturing (printing) into two parts, creating large points of possible leakage, or designing within the size of said printer, where the latter of the options was chosen.

Figure 4: Final Assembly of the Head & Body

The decision to create a single piece body was made to prioritize the seal of the fish, being that the largest constraint of the project was waterproofing the design. This decision restricted build size, affecting the pump size and more, but was beneficial in other aspects. The other large decision on the body was for solid infill. Because of the large cavity within the body, this section of the fish is much more buoyant than needed, so a denser shell would result in less weight needed to reach the goal of neutrally buoyant. There were not many design changes instrumental to the shape or manufacturability of the head and body itself, as the changes were made to accommodate the sensors and fasteners as the project progressed. Through final testing, the head and body withstood the leakage test for the tested 30 minute period, defined by code IP67, keeping the interior cavity dry through the entire length of the test.

Propulsion/Motor

To power the movement of the tail, hydraulics were determined to be a unique and untapped method. To move the fluid from each channel, a gear pump was chosen, and will be powered by a brushless, waterproof, DC motor.

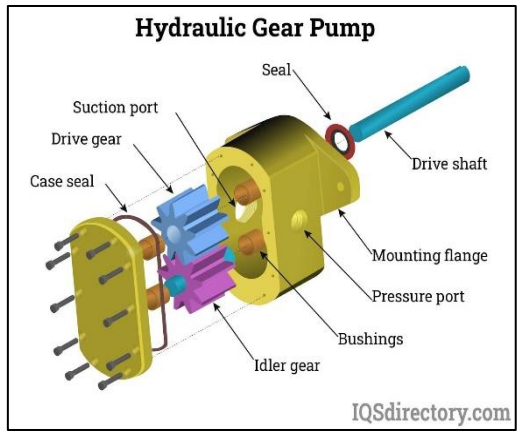

Figure 5: Gear Pump Diagram (IQSdirectory.com)

The original design for the gear pump was based on the size restriction inside of the body cavity. The most important aspect of the gear pump is the gear sizing, design, and positioning. The sizing was determined through the restriction of the enclosure, as well as what parameters could be achieved using the general design similar to Figure 5. The design of the gears was determined through research, with a weighted selection based upon ease of manufacturing, strength, and efficiency. The compared designs were spiraling gear teeth and vertical gear teeth, as well as the shape of the teeth.

Early design changes included switching the method in which the water would be delivered to the tail section, with early designs involving tubing and the final design interfacing directly to the tail adapter. Additionally, the shape pf the gears were experimented with, and standard gears were shown to have the worst flow rate output, and the design of the gears was tested throughout the life of the part. Finally, the shape of the gear pump was slimmed down in areas where the material wasn't needed, allowing for a smaller footprint inside of the body.

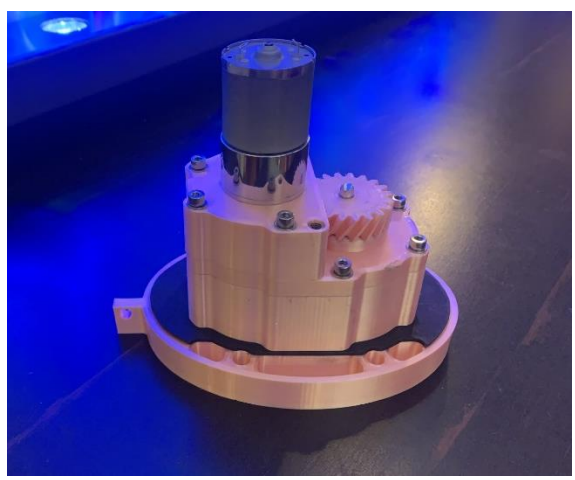
Figure 6: Final Assembly of Gear Pump

The final design of the gear pump was achieved by tweaking various issues with the model brought up in the conceptual design phase, as well as the changes to the initial prototypes that were manufactured and tested. These changes were brought about to promote rigidity and strength under the forces of the moved water, but primarily to achieve a higher water pressure and volumetric flow rate output from the pump. Several design changes including gear shape, where a transition to herring-bone gears was made, as well as adding additional gears to achieve a higher gear ratio to output higher torque was used. Finally, a custom laser-cut gasket was made to attach the gear pump to the mounting plate, an area that showed potential for water and pressure leakage. The efficiency of the gear pump increased drastically throughout the changing in design, with a final experimental value of 70.15 mL/sec flow rate, 46% of the analytical flow rate of 151.15 mL/sec, resulted using **Equation 2: Gear Pump Displacement Equation**. A summarized evolution of the gear pump design is highlighted below in the figure below:

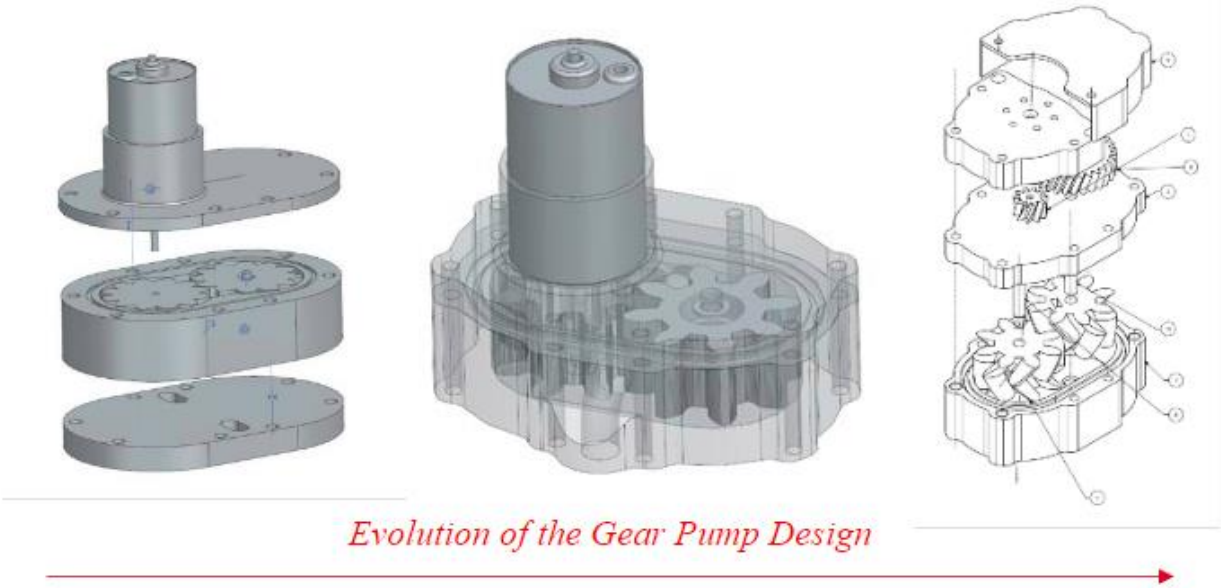

Figure 7: Evolution of the Gear Pump

Tail

The tail itself was designed to best match the physical appearance of a fish, as well as accommodate the hydraulics meant to make the fish flex in one axis to mimic the motion of a fish tail. To do so, the tail was designed to be made of silicone, utilizing its flexibility. To achieve a fully-silicone tail, a mold would have to be made, and was decided to also be 3D printed. The tail was molded into two pieces for the sake of the chambers designed inside of the tail for the hydraulic chambers, as well as ease of molding. The thickness of the channels was determined through a series of tests, outlined in the tables below (Tables 1 and 2) by changing the parameters and comparing the resulting simulation, as thinner walls result in more deflection, but are more likely to tear. Other design features involving the tail are the device(s) required to attach the tail to the body. These designs are expanded upon in the following section **(Tail to Body Adapter)**.

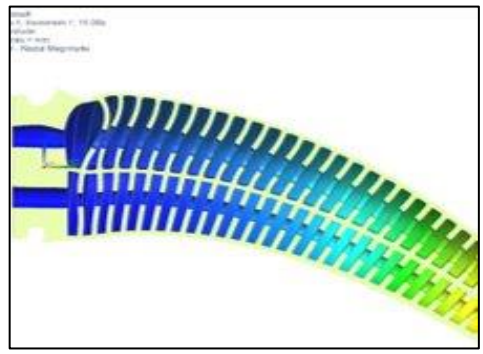

Figure 8: Tail Flex Simulation (NX Simcenter)

Table 1. Deformation Based on Count and Pitch

Trial	Count	Pitch Distance (mm)	Top Thickness (mm)	Bottom Thickness (mm)	Deformation (mm)
1	19	16	4	4	93.61
2	17	14	4	4	115.21
3	15	12	4	4	118.05
4	23	10	4	4	120.4
5	28	8	4	4	120.66
6	19	16	3	3	113.1
7	17	14	3	3	117.25
8	15	12	3	3	120.25
9	23	10	3	3	123.17
10	28	8	3	3	124.59

Table 2. Deformation Based on Varying Wall Angle

Trial	Count	Pitch Distance (mm)	Top Thickness (mm)	Bottom Thickness (mm)	Inner Angle (degrees)	Deformation (mm)
1	14	16	3	10	85.55	104.91
2	14	16	3	6	88.1	108.11
3	14	16	3	4	89.36	109.81
4	14	16	3	3	90	109.3
5	14	16	4	3	90.64	109.29
6	14	16	6	3	91.9	104.91
7	14	16	10	3	94.45	107.05

8	21	11	10	3	94.45	112.27

Using

Table 1, it is clear that the deformation increases based on the pitch and count of the tail. As the number of chambers increases, the deformation does as well. This is regardless of the wall thickness and can be seen following the same pattern with both 3mm and 4mm wall thicknesses. Table 2 shows a second test to see if varying the angle of the walls along the fish would change the deformation. There were some differences in the results that showed that having a varying thickness was not significantly effective in increasing deformation. When the changing the pitch and count of a known trial and graphed in Figure 11, the deformation increased significantly. This showed that the driving factor in deformation is pitch and count and not varying wall thickness. These results show that the optimal tail design is one with the most chambers possible with a wall thickness of 3mm.

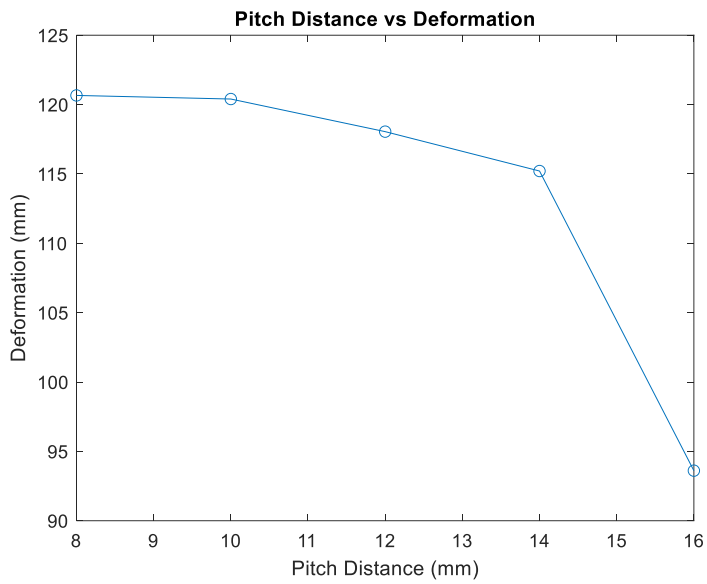

Figure 9: Tail Pitch Distance vs Deformation Plot

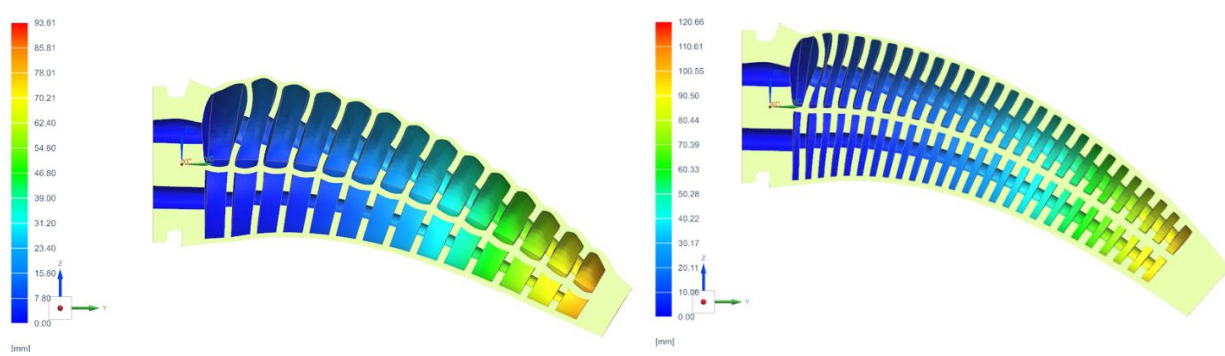

Figure 10: Tail Pitch Distance vs Deformation Analysis

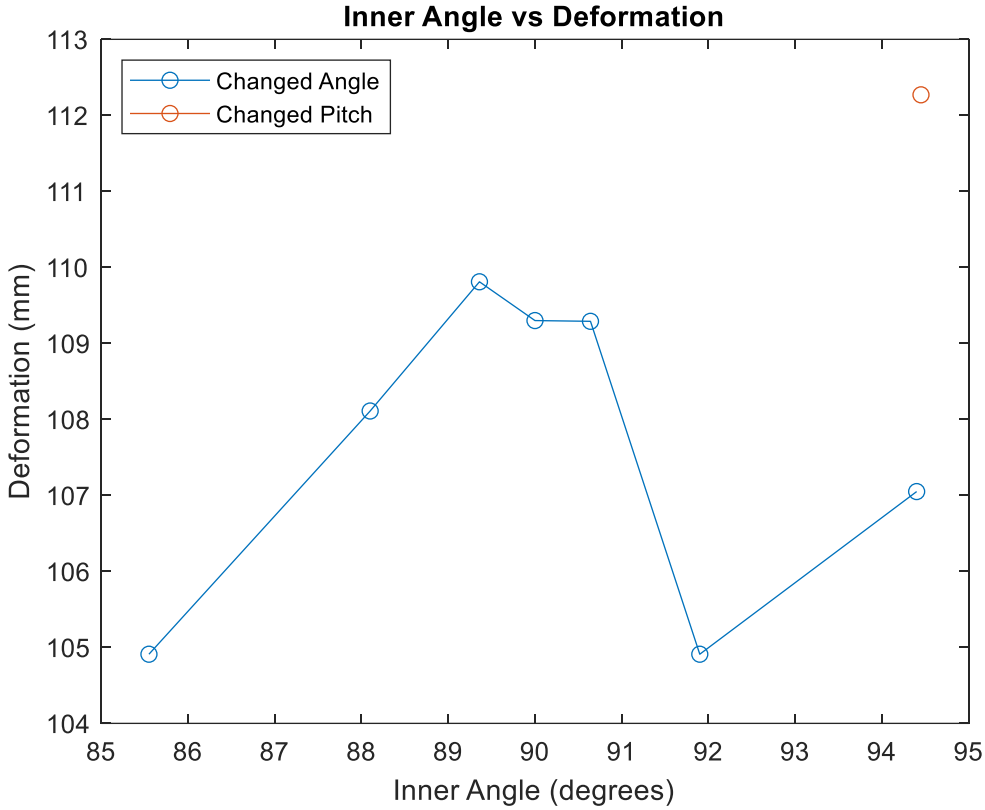

Figure 11. Deformation vs Inner Angle

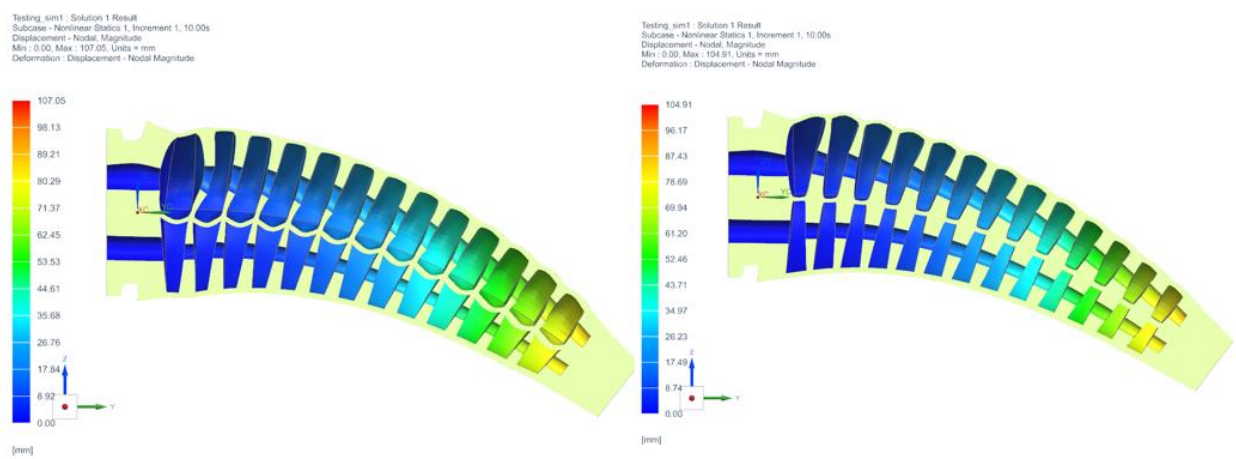

Figure 12. Tail Deformation with Varying Angles

The final design was casted using a 3D printed mold with a silicone pour and red dye to produce a print color. After molding the two halves of the tail the two were glued together using silicone glue to maintain a watertight seal.

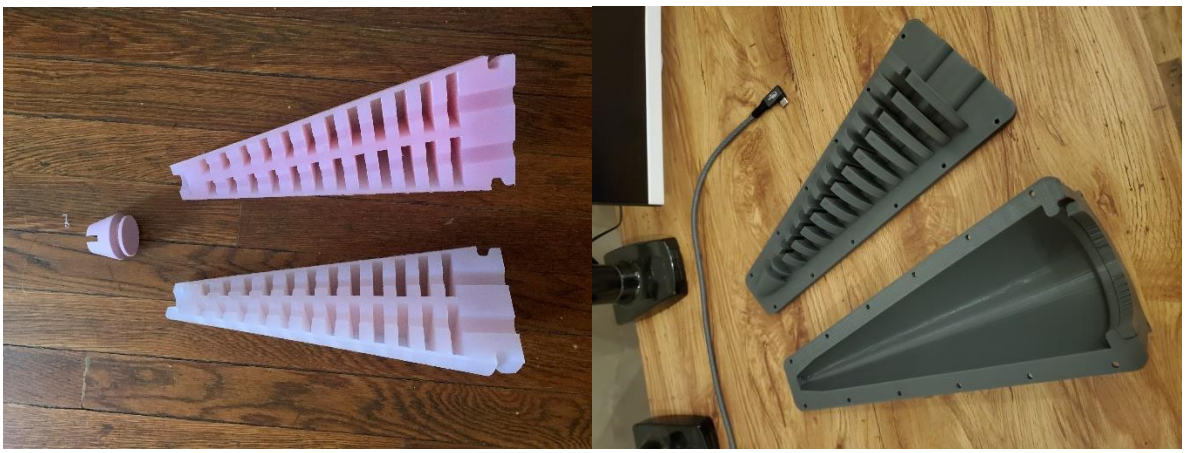

Figure 13: Silicone Molded Tail and Mold

Figure 14: Final Fully Assembled Silicone Tail

Tail to Body Adapter

Early brainstorming sessions provided many options to attach the body to the tail. Some of the key features wanted were rigidity, water tightness, and ease of use. Early designs included a two-piece adapter that would wrap around a groove of the tail. This concept was brought to life in the first prototype, but lacked the proper seal that was desired, and created potential points of leakage. The initial design to connect the tail and body included imbedding a ring into the silicone tail is shown in Figure 15 below.

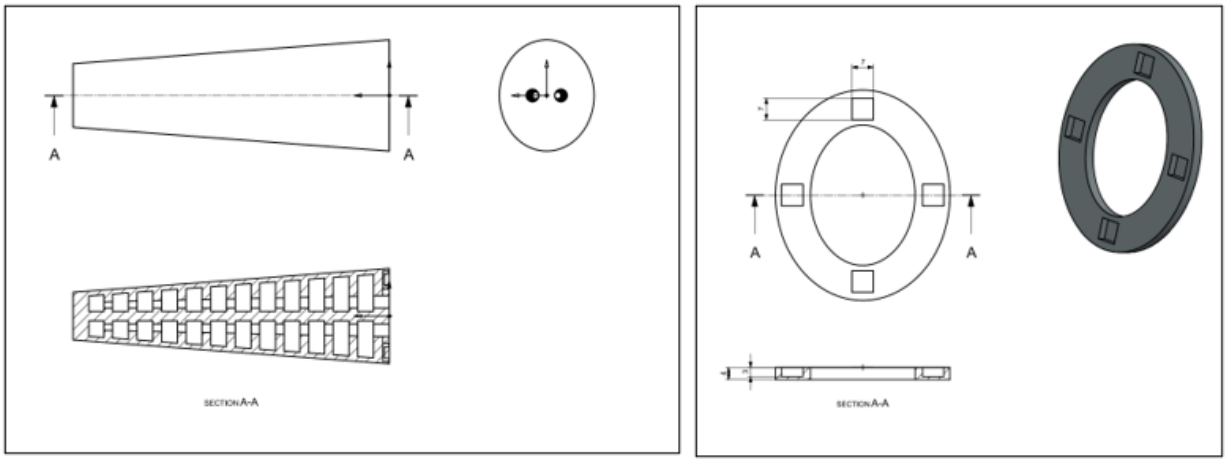

Figure 15: Initial Tail to Body Adapter Design

Upon the completion of the first prototype, the manufacturability and effectiveness of the interface was questioned. Centering the ring perfectly, preventing ripping the tail from the ring would not have been easily done. Centering the ring when putting in the silicon tail mold would prove difficult without a setting piece, and the strength of the silicone with a metal ring in it was not certain to hold the ring in place and prevent leaking when the tail would be flexing as the fish swam. Therefore, the idea for a two-piece bracket was chosen. This would encompass the silicon tail, made to easily collar around the tail.

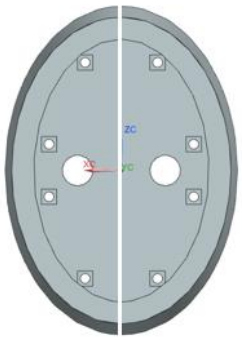

Figure 16: Split-Design Tail to Body Adapter

Later this design was and then adapted to becoming a one-piece collar/bracket. The silicon of the tail was easily fit into it without having an additional piece and a seam that the 2-piece solution resulted in. The current design using the friction/suction fit is shown below in Figure 17.

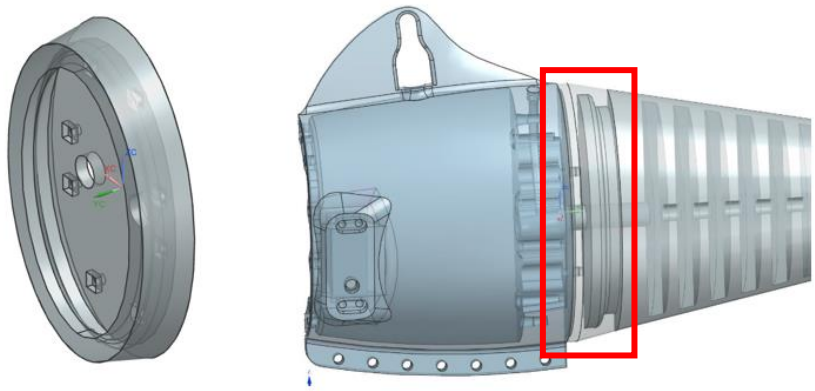

Figure 17: Current Tail to Body Adapter Design

The final product was created to provide a leak proof seal between the tail, gear pump, and body of the fish. Including the heat sink interns for threads and through bolts through said parts, as well as a port in which the fish could easily be filled without disassembling the fish. Below is the latest design.

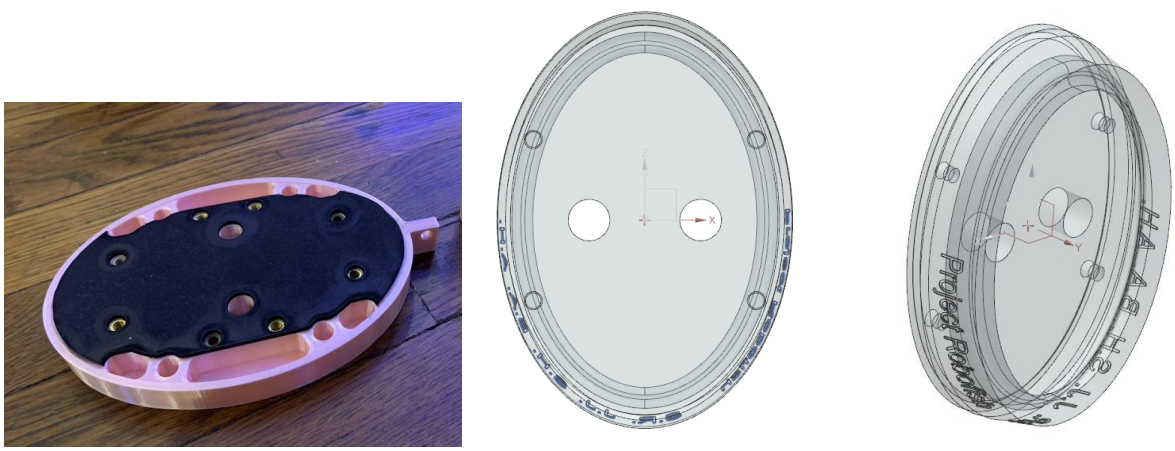

Figure 18: Final Interface Design

Buoyancy Counterweight System

Knowing that with several different materials, with air cavities in the front and a dense water filled silicone tail in the back, there would be issues with the balance of the robot. During early brainstorming sessions, there were many ideas around how the fish would be corrected, knowing weight would need to be added to the front. Early design ideas surrounded small pockets built into the body cavity, to be filled with small pieces of lead shot. This idea likely would have been sufficient but would not be very accurate in leveling out the center of mass. Additionally, the amount of weight able to be added would be limited to the volume that could be spared within the body cavity, which as the design phase progressed, proved to be much smaller than originally expected. The final design chosen was a weight rail system, on the outside, bottom part of the fish, where weight can be added and slid forward or backward to balance the fish in the water.

The design decision to make the fish neutrally buoyant provides a simplified solution to keeping the fish in suspension of the water. To move the fish up and down, pectoral fins will be used while the fish is moving through the water. An important distinction is the calculations for buoyancy have been made in terms of freshwater, and an adaptation would be needed for saltwater (ocean) use. Using NX to obtain the total volume of the fish, and density calculations, the buoyancy of the fish was calculated to sink in the tail section and is too buoyant in the body section. These calculations were proved correct in our initial buoyancy test and are being corrected. The front portion will be much easier to adjust, as weight can easily be added with the placement of dense lead weights within the housing. The tail section, however, is slightly harder, as there is a need for air pockets within the tail itself. This solution is being implemented for further testing.

To achieve a final design that remedied these issues, a rail system was implemented to the bottom of the body, allowing the user to move the weight around the center of mass of the fish. This would allow the fish to be near-neutrally buoyant in almost any environment.

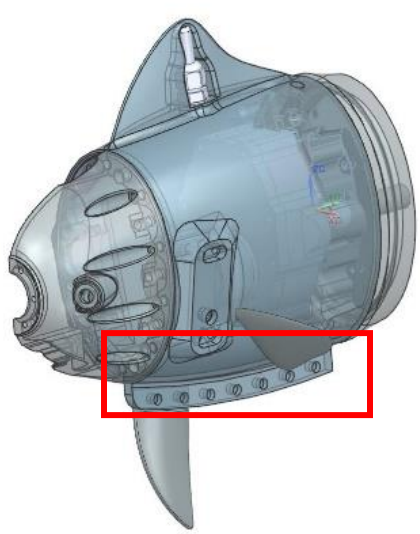

Figure 19: Weight Rail for Buoyancy and Balancing

Pectoral Fins

From the initial conceptual design to the final product, the intent for the pectoral fins has been to gradually steer the fish both vertically and horizontally. Because the hydraulic pump would be very hard to steer through the tail. The fins would act similarly to airplane wings, using drag to create a moment force on either side of the fish, gradually turning the fish, and lift to climb. The mechanism to control these pectoral fins were designed to be servo motors, allowing the control to have set angles for predetermined maneuvers. The size of these motors was determined using Equation 3: Torque Calculation for Pectoral Servos.

The only changes brought to the pectoral fins were the size and connection point. Early on, the designed fins were relatively small, as the thought of weight and drag were prioritized. However, after testing the stability of the initial prototype, wider and heavier fins were needed to prevent the fish from rolling. Connection -wise, the mounting of the servos and how they were attached had to change to account for this, resulting in a smoother rotation of the fins.

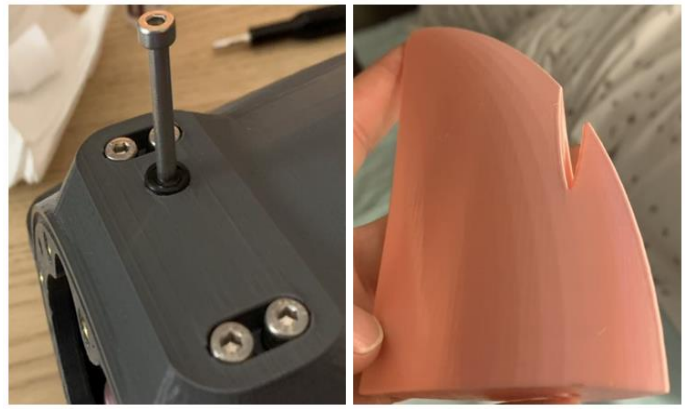

Figure 20: Final Product of Servo Connection and Pectoral Fins

Drag Coefficient Simulation

Using ANSYS Discovery, a CFD was run to determine the theoretical drag coefficient developed by the profile of the fish, given an underwater environment, with water flowing head on a 1m/s. The drag force on the entire fish was 4.52N.

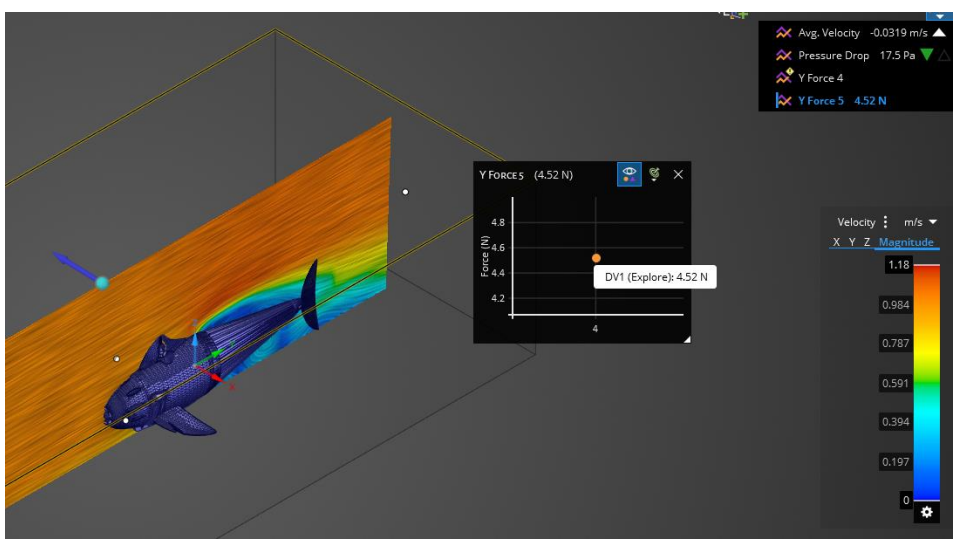

Figure 21: Drag Coefficient Simulation (1)

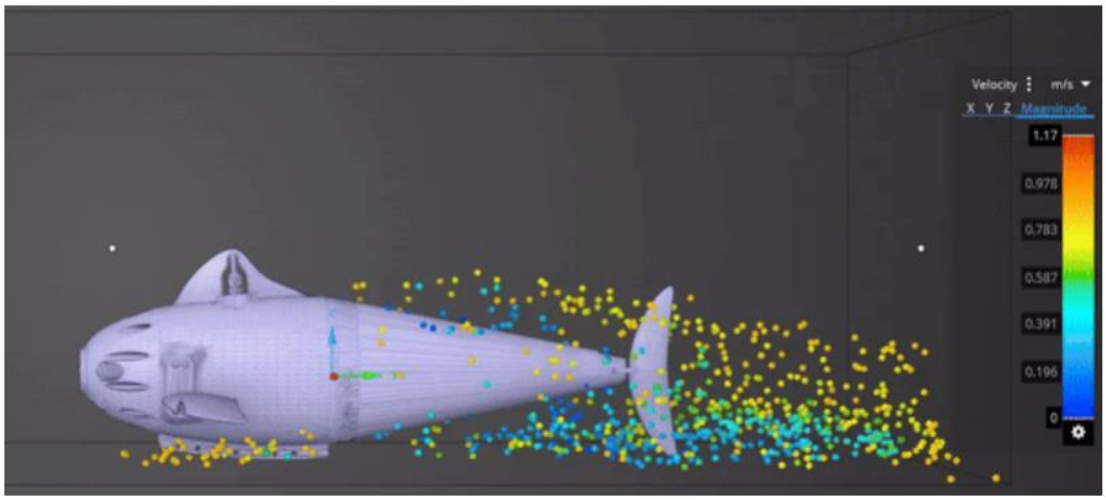

Figure 22: Drag Coefficient Simulation (2)

Electronics

The electrical schematic remained unchanged throughout the life of the project, as there was a heavy emphasis on achieving a viable design early on to reduce the issues encountered later if things needed to be changed. The Circuit Diagram shown below in Figure 21 show the connection between the battery, Raspberry Pi, and the additional items.

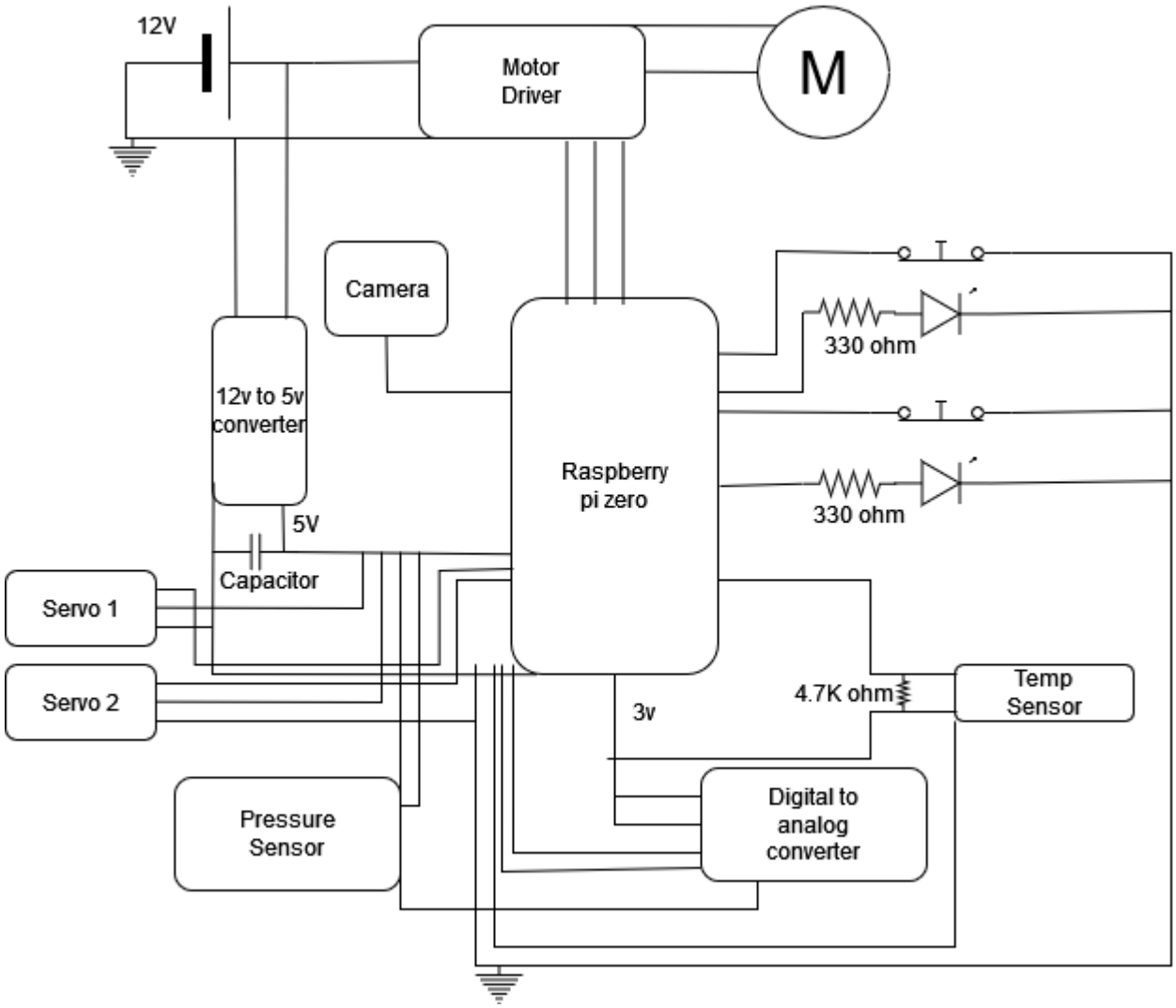

Figure 21. Circuit Diagram

Table 3. Pinouts

Pins	1	2	4	5	6	7	8	9
Servo 1	Ground	5V	GPIO (PWM)					
Servo 2	Ground	5V	GPIO (PWM)					
MCP3008	Ground	Ground	3.3V	3.3V	GPIO	GPIO 10 (MOSI)	GPIO 9 (MISO)	GPIO 11 (SCLK)
Temp Sensor	Ground	3.3v	GPIO 4 (one-wire)					
Pressure Sensor	Ground	5V	CH 0					
Red Button	Ground	Ground	GPIO	GPIO				
Yellow Button	Ground	Ground	GPIO	GPIO				
Motor Driver	Ground	12V	GPIO	GPIO	GPIO			
Camer	Ribbon Cable							

Overall Assembly

Through many design changes and improvements on individual parts, the final assembly of the Aquatic Robot for Underwater Exploration takes on the design as shown in Error! Reference source not found.. The indicated changes came to be through testing, reconsideration, and priority changes, many of which highlighted in the *Conceptual Design* section above. The final renditions of individual parts and assemblies are detailed in the following sections. The complete assembly is put together using various fasteners, many with O-rings and other waterproofing methods to prevent leakage into the cavities of the robot. These fasteners were selected and installed in accordance with the several fastener and thread codes listed in the *Engineering Standards and Codes* section.

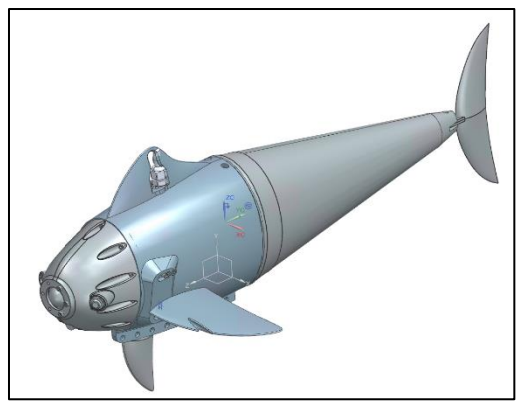

Figure 23: Finale ARUE Assembly

Summary and Conclusions

The original goal of this project was to produce a cost effective, realistic robotic fish that could collect data underwater while being fully controlled remotely. The fish design would be unique in

the fact that it would use a hydraulic actuating system to create the tail flipping movement to propel the fish. Using various design methods and engineering principles as well as results from testing and analysis, a fully assembled robotic fish was created. 3D models were used for testing and defining the size and space capacity of the fish. Additional models were used for defining buoyancy and mass of the robotic fish. Testing was undertaken extensively to optimize the gear pump output flow, as well as waterproofing the entirety of the fish and troubleshooting sensors and code for the electronics.

The final product produced was a fully assembled robotic fish, with tail movement using a hydraulic gear pump, Pi electronics for control of all sensors (pressure, temperature, and camera) and control of the pectoral fins, a tail interface to connect the body of the fish to the tail. The design combined soft and hard robotics, made entirely of 3D printed parts (PLA), and silicone. It has the ability to adjust its buoyancy, while being fully waterproof, and with the capability of moving the pectoral fins for angular and vertical movement of the entire fish while underwater. The entirety of the fish was successfully made to be easily re-manufactured with a budget of 200$, and can be used for minimally invasive, small research operations for shallow water research.

Figure 24: Rendering of Final Product - Fully Assembled

Future Work/Subsequent Development

The goals for further developments include improving the hydraulics of the fish, particularly the gear pump. The fish, though can make a tail swishing motion, was not to the standard that it was meant for. Improvement to the gear pump as well as the tail mold would also be considered to increase the deflection of the tail to provide a more realistic tail motion. Further improvements on sensor control feedback as well as calculating moment of inertia for the tail need to be designed as well as improved water proofing of the fish. The use of a chemical called “dichtol” could be used for this purpose. The initial goal for a fully remote-controlled system was also not met. Underwater communication is a highly ambitious project and would need to be fully developed to provide remote control of the fish movement as well as continuous data feedback.

References

Industrial Quick Search. (n.d.). Hydraulic Pumps. Construction, Types, Applications, and Benefits. https://www.iqsdirectory.com/articles/hydraulic-pump.html

Advances in Deep-Sea Sampling with Soft Robotics: NOAA Ocean Exploration. (n.d.). https://oceanexplorer.noaa.gov/explorations/22sampling-robotics/welcome.html

Crownhart, C. (2021, March 13). *Bio-inspired soft robotics are making a splash in ocean research - Scienceline*. Scienceline. https://scienceline.org/2021/03/bio-inspired-soft-robotics-are-making-a-splash-in-ocean-research/

Fig. 1: Evolutionary design of deep-sea soft machines. | Nature Communications. (2023, November 4). Nature. https://www.nature.com/articles/s41467-023-42882-3/figures/1

SOFI - The Soft Robotic Fish | MIT CSAIL. (n.d.). https://www.csail.mit.edu/research/sofi-soft-robotic-fish

- ~~Standards~~
- Code

Appendices

Calculations

Calculations 1: Buoyancy Calculation Sheet

Part	Volume (mm3)	Mass (kg)	C.O.M . (x,y,z) mm	
Left Body	120343.61	0.9424	(32.76,-62.12,-1.81)	
Right Body	120343.61	0.9424	(-32.76,-62.12,-1.81)	
Left Head	63637.99	0.4983	(24.15,-160.17,-1.68)	
Right Head	63637.99	0.4983	(-24.15,-160.17,-1.68)	
Motor	49767.24	0.3918	(0,-66.41,20.76)	
Gear Pump Bottom	57881.01	0.0695	(0,-7.98,0)	
GP Middle	116084.22	0.1393	(0,-22.86,0)	
GP Top	42775.14	0.0513	(0,-42.6,2.58)	
Top Fin	Ignored			
Left Fin	Ignored			
Right Fin	Ignored			
Tail Fin	Ignored			
Left Servo	24476	0.0664	(29.46,-110.1,-11.85)	
Right Servo	24476	0.0664	(-29.46,-110.1,-11.85)	
Pressure Sensor	15404.32	0.1213	(0,-153.2,-37.25)	
~~Solid Fill Body~~	1616994.58		(0,-63.23,0)	
Air Body	1060847.75	0.00137	(0,-63.23,0)	
~~Solid Fill Head~~	467578.68		(0,-163.03,0)	
Air Head	324898.38	0.00042	(0,-163.03,0)	
Tail	1011980.6	1.45	(0,97.68,0)	
Air	**1385746.13**	**0.00179**	**(-19.63,-113.13,0)**	
				Density
TOTAL	3096553.86	5.23919	(0,-32.664,0.083)	1.69194E-06
Point Masses				Density
Tail	1011980.6	1.45	(0,97.68,0)	1.43283E-06
Body +GP+SV	1616994.58	2.67087	(0,-50.355,1.228)	1.65175E-06
Head+PS	467578.68	1.11832	(0,-159.415,-2.543	2.39173E-06

PLA			
PLA			
PLA			
PLA			
Soft polyurethene used as substitute material in NX			
Body	240687.2	1.8848	(0,-62.12,-1.81)
Head	127276	0.9966	(0,-160.17,1.68)
Servos	48952	0.1328	(0,110.1,-11.85)

Drawings

Drawing 1: Full Fish Assembly

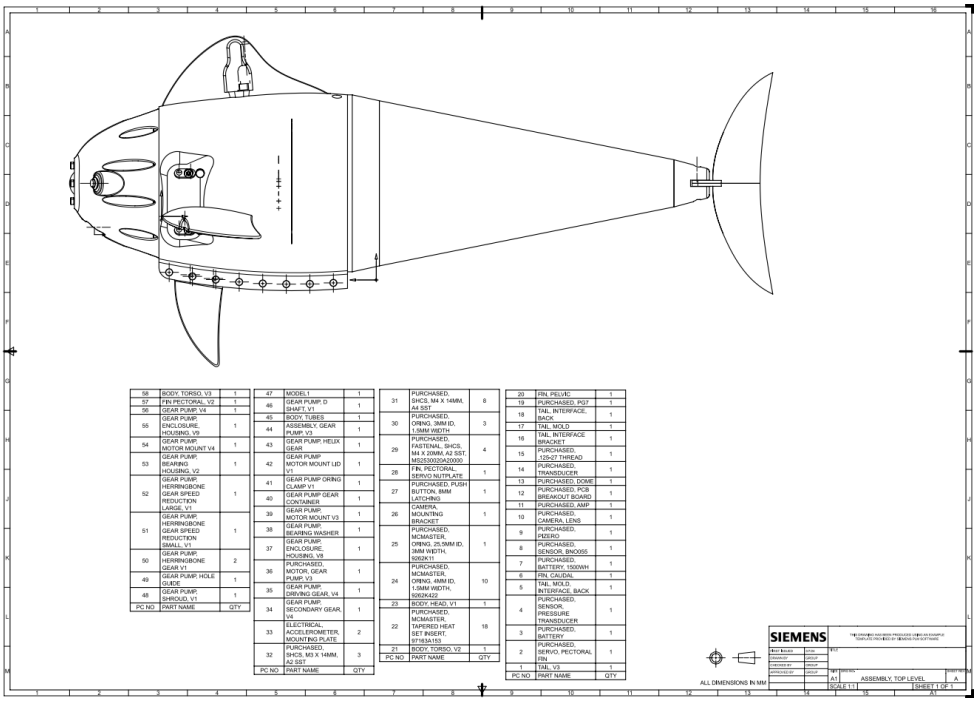

Drawing 2: Gear Pump Assembly -Exploded View

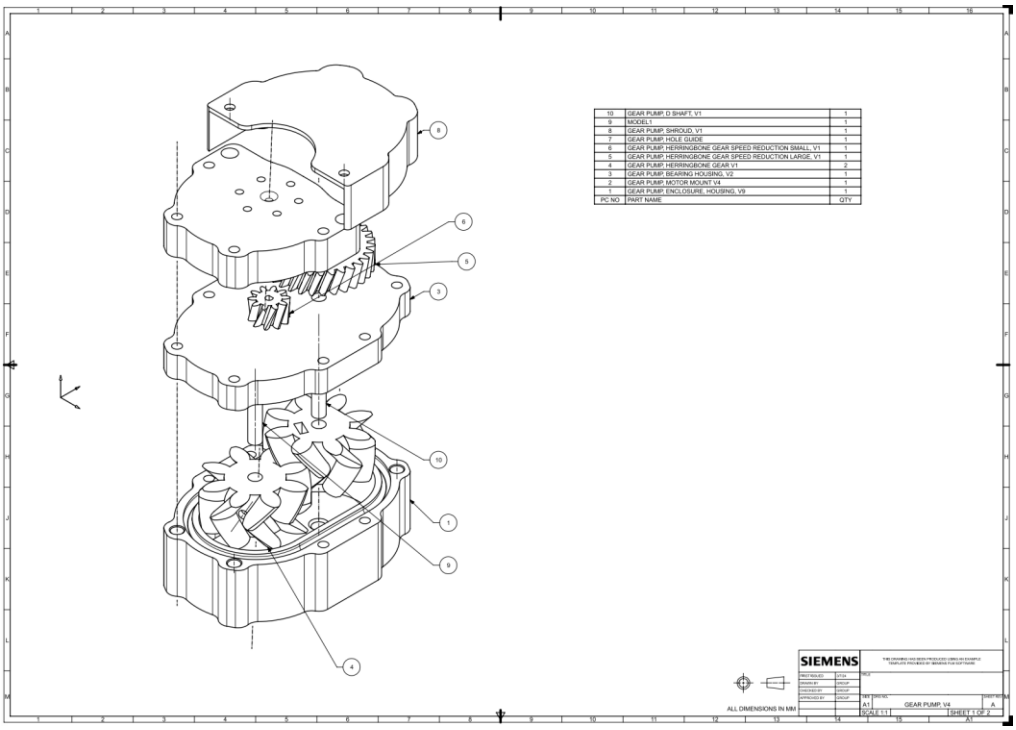

Drawing 3: Gear Pump Assembly - Dimension View

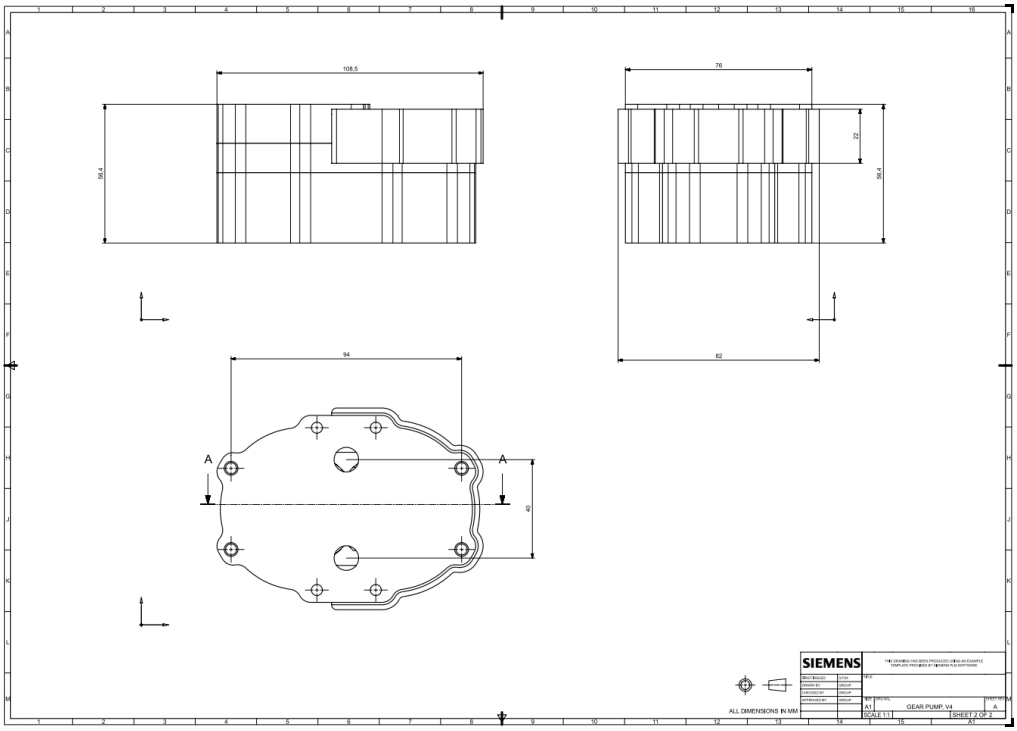

Drawing 4: Tail Interface

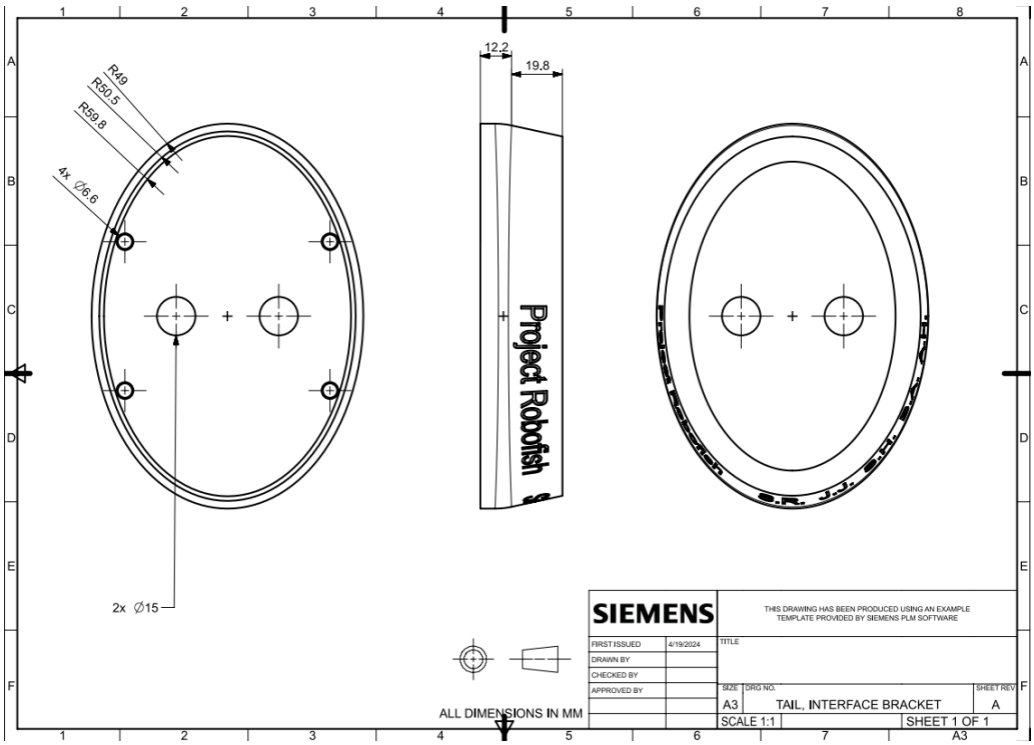

Drawing 5: Silicone Tail Mold

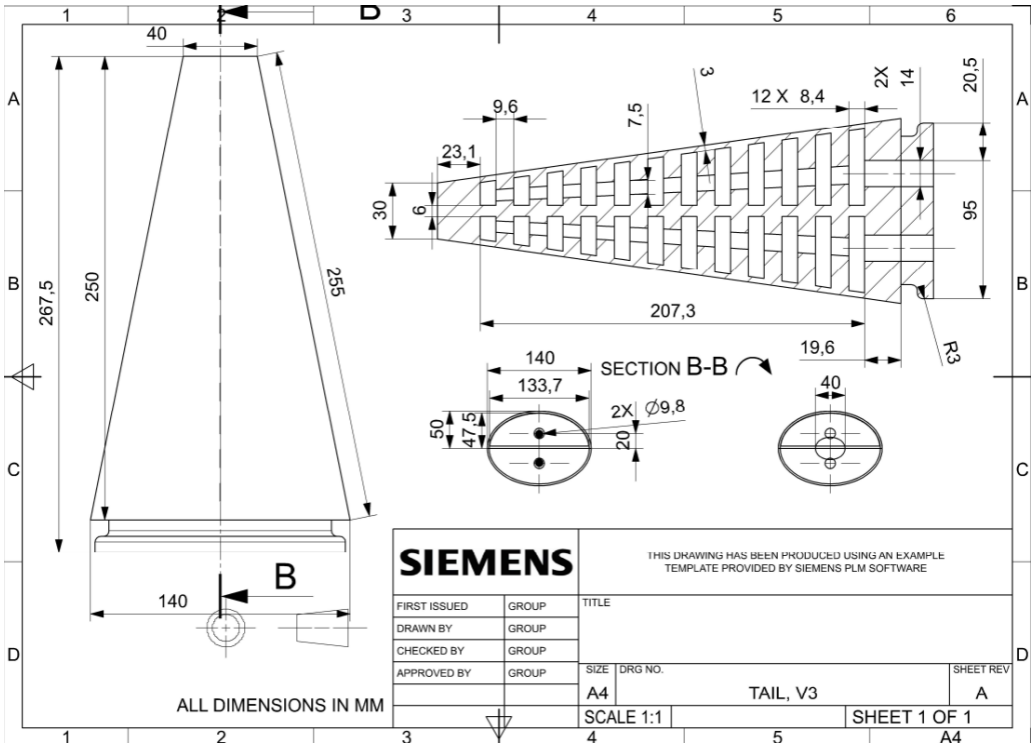

Drawing 6: Fish Caudal (Tail) Fin

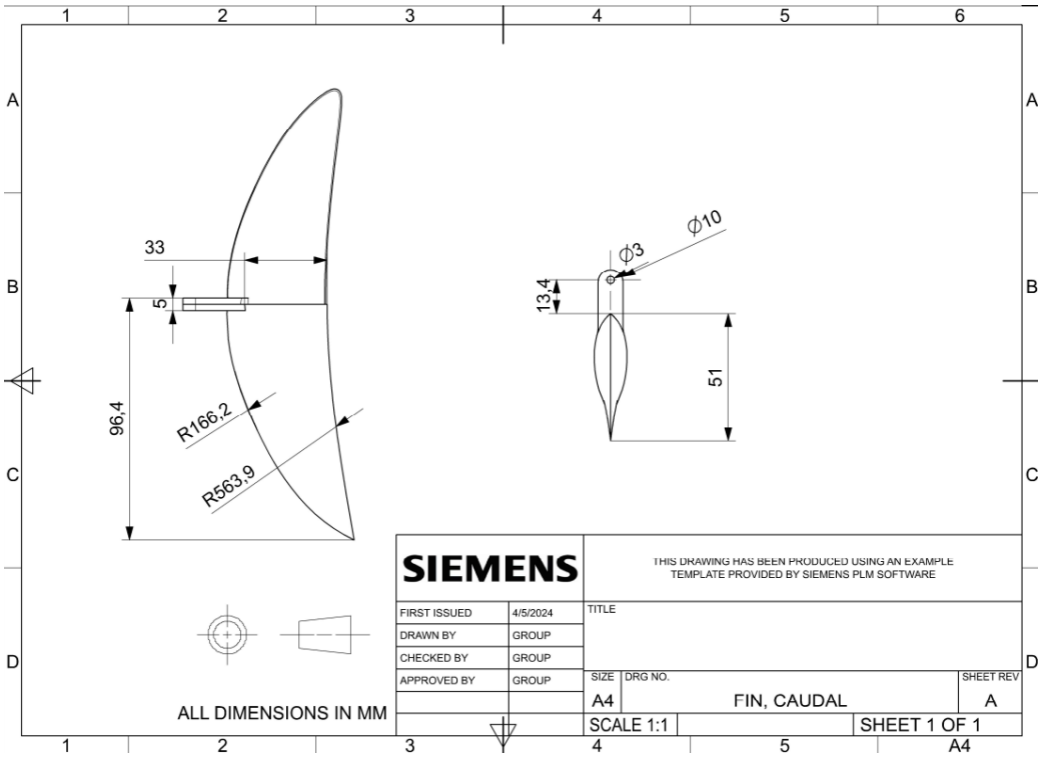

Drawing 7: Fish Tail Back Interface

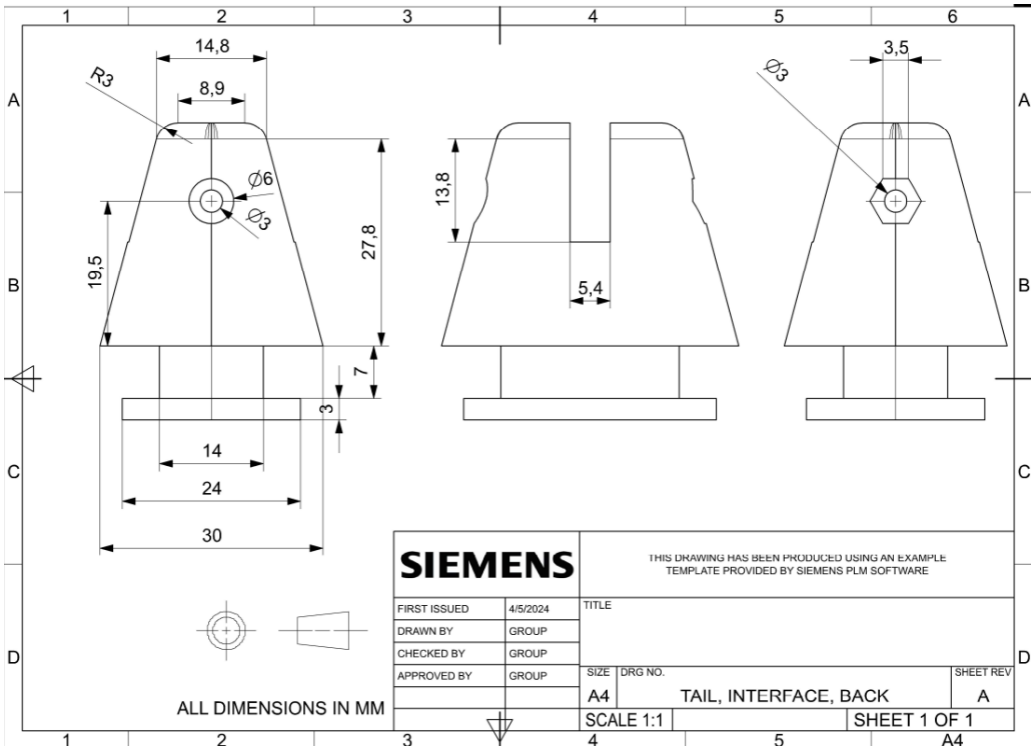

Drawing 8: Pectoral (side) Fin

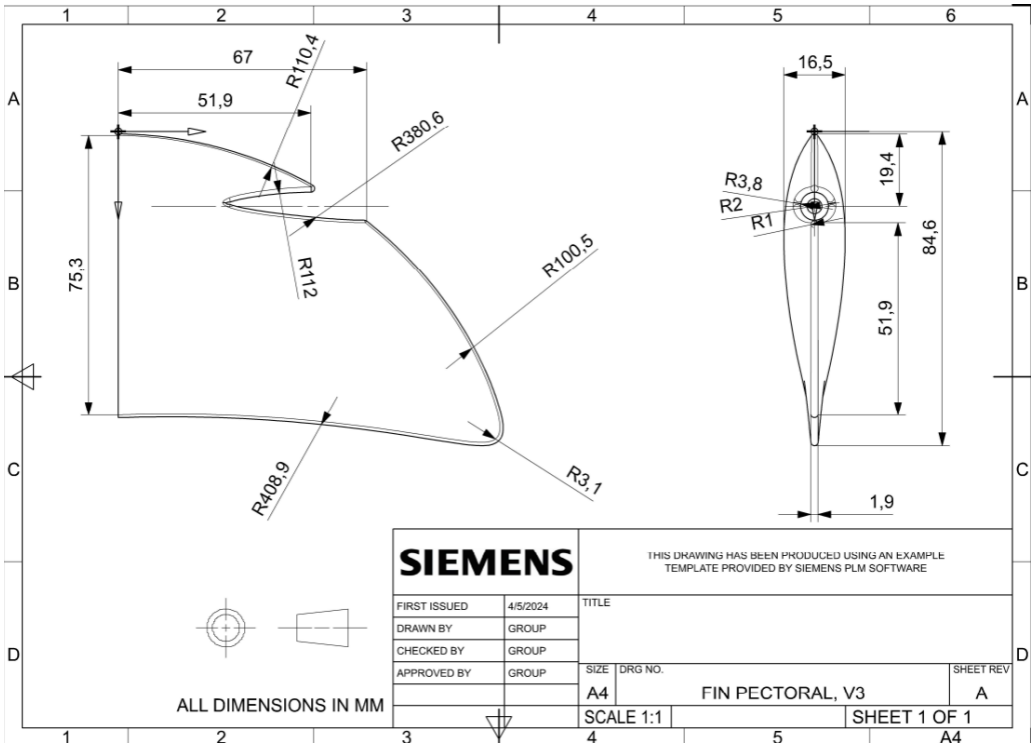

Drawing 9: Pelvic (bottom) Fin

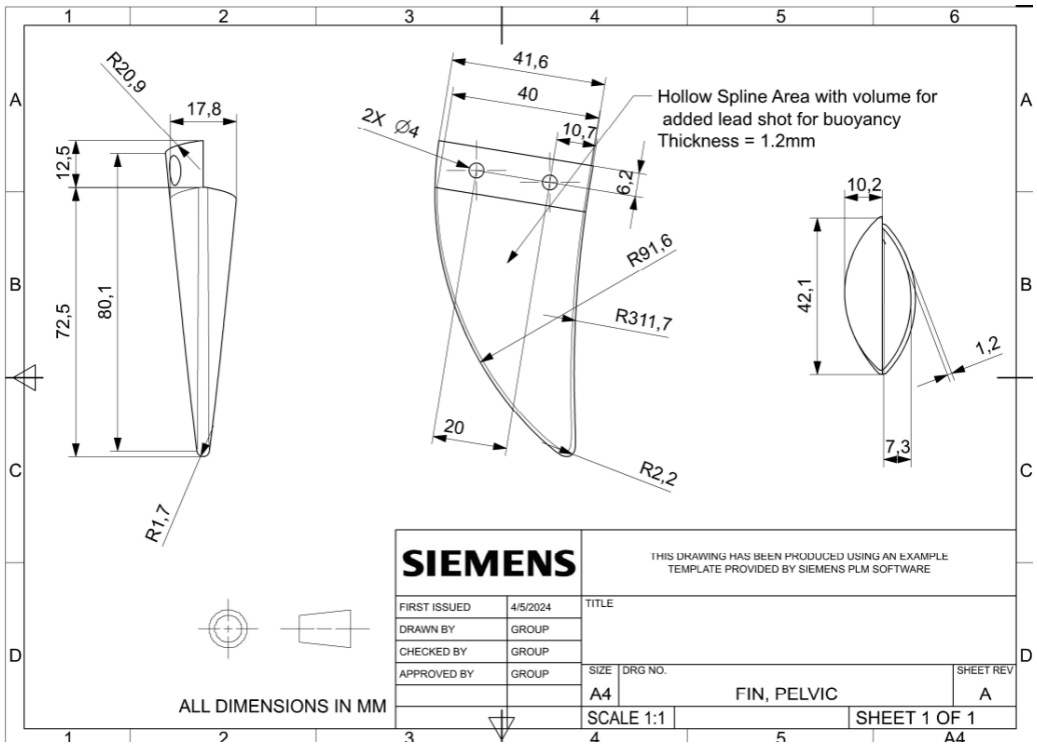

Drawing 10: Fish Head

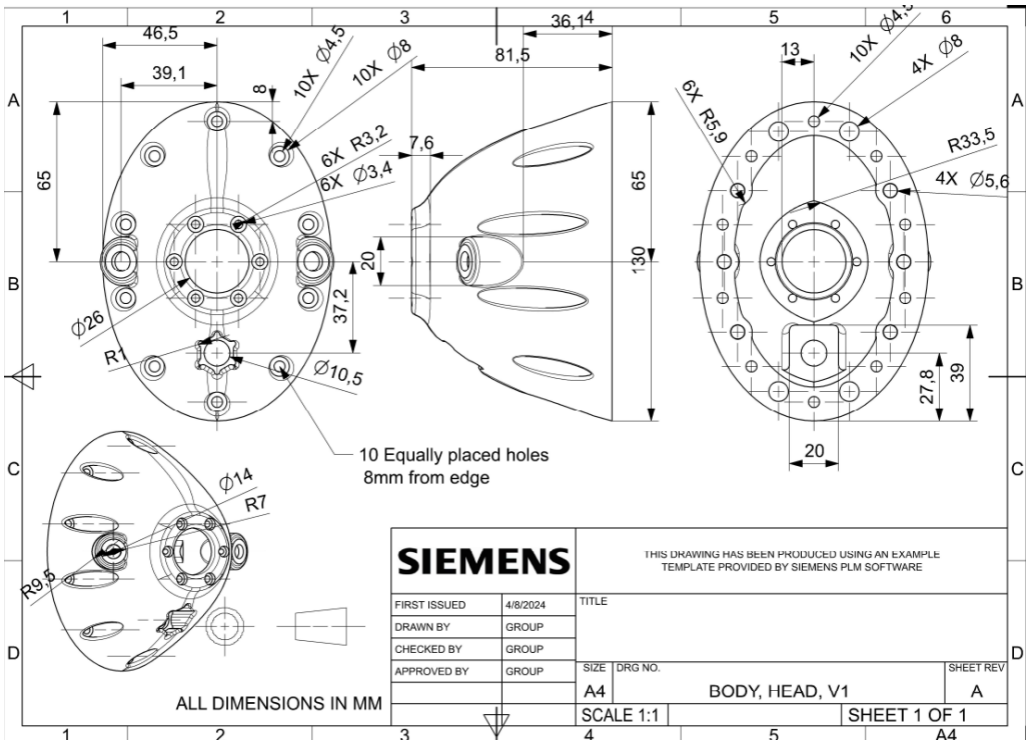

Drawing 11: Fish Dome

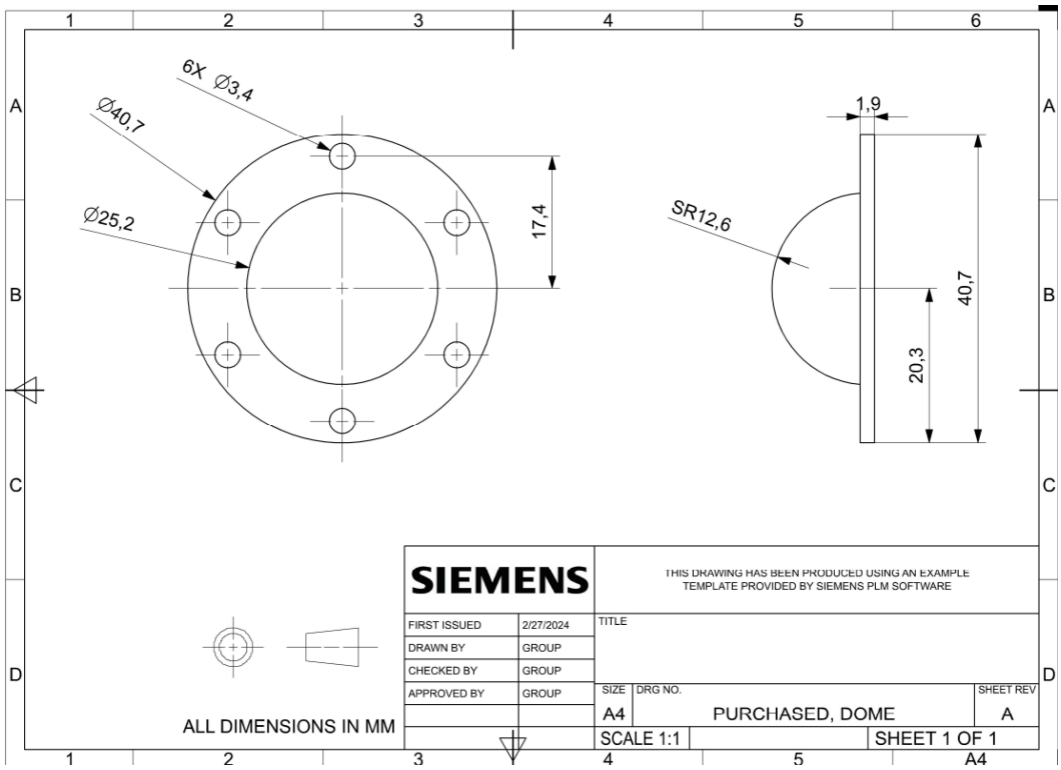

Drawing 12: Fish Body

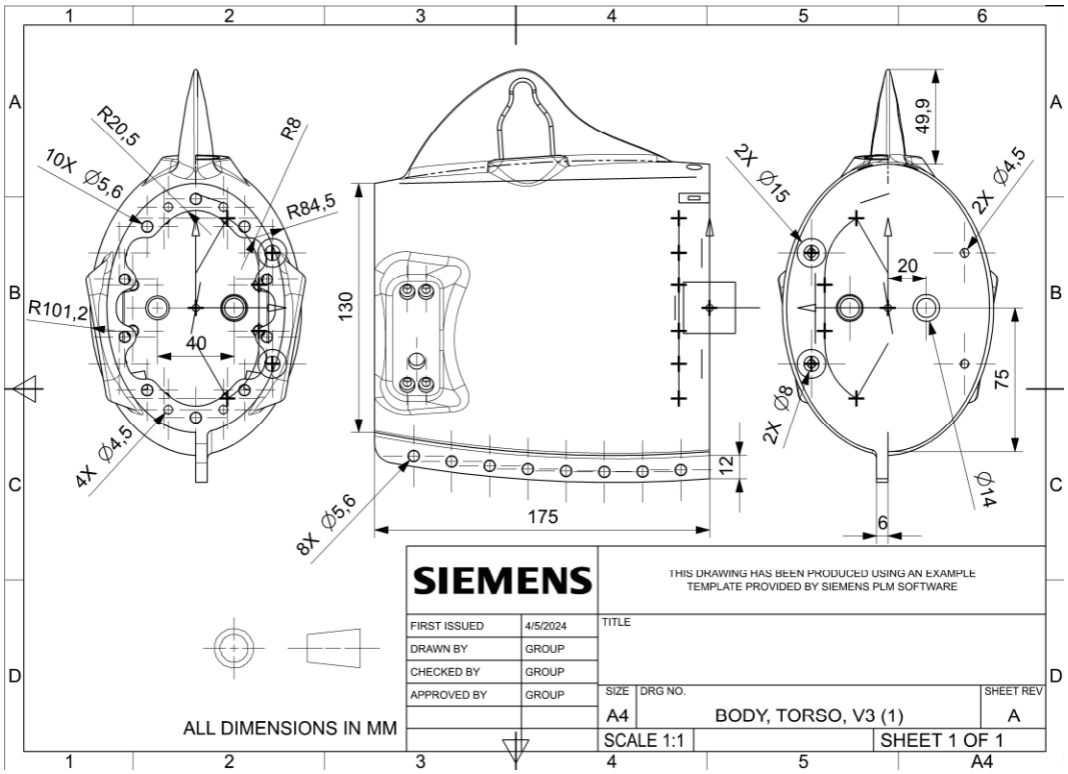

Drawing 13: Full Body Assembly, Exploded

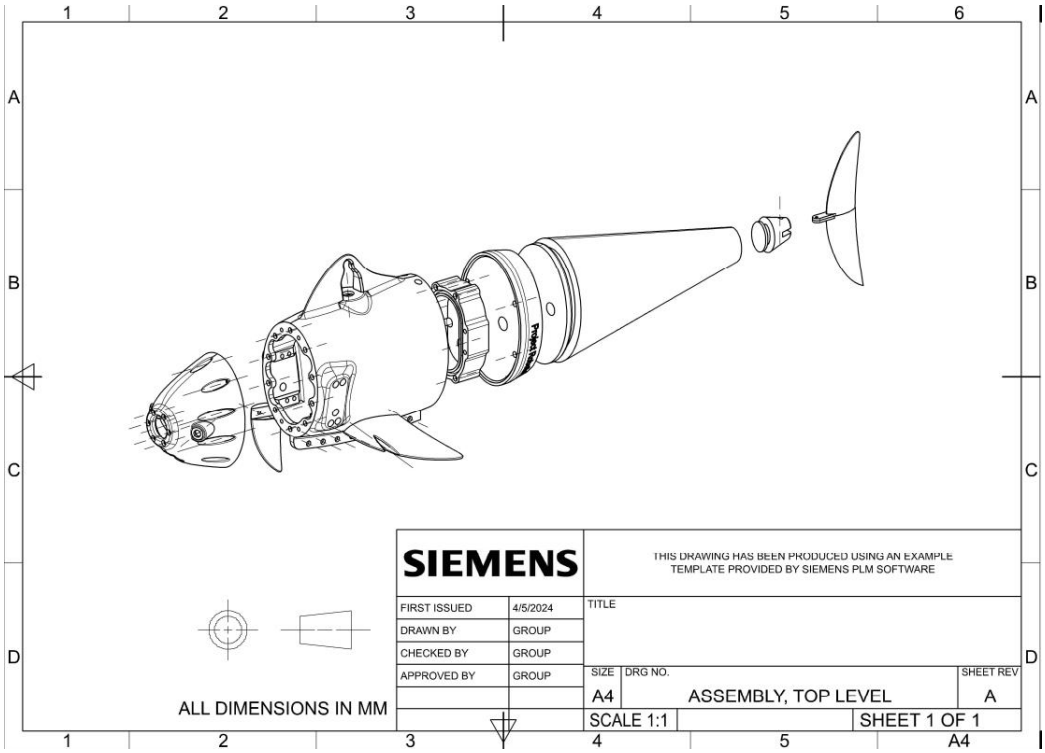
SIEMENS
THIS DRAWING HAS BEEN PRODUCED USING AN EXAMPLE TEMPLATE PROVIDED BY SIEMENS PLM SOFTWARE
FIRST ISSUED 4/5/2024
DRAWN BY GROUP
CHECKED BY GROUP
APPROVED BY GROUP
TITLE
SIZE A4
DRG NO. ASSEMBLY, TOP LEVEL
SHEET REV A
SCALE 1:1
SHEET 1 OF 1
ALL DIMENSIONS IN MM

Hour Log

Benjamin Ambos

Date	Hours	Description
10/5/2023	2	Weekly meeting
10/9/2023	4	Gear pump
10/12/2023	2	Weekly meeting
10/16/2023	3	Gear pump modelling
10/19/2023	2	Weekly meeting
10/20/2023	5	Gear pump modelling
10/26/2023	1	Meeting and organization of files
11/2/2023	2	Weekly meeting
11/9/2023	2	Weekly meeting
11/10/2023	4	File organization and modeling of parts
11/11/2023	3	Modeling of body and tail interface washer
11/16/2023	2	Weekly meeting
11/21/2023	3	Gear Pump Research and Redesing
11/30/2023	2	Weekly meeting
12/1/2023	2	Meeting with Dieter
12/8/2023	2	Weekly meeting
12/13/2023	2	Weekly meeting and circuit diagram
12/21/2023	1	Weekly Meeting - Molding and Crcuit Refresh
12/22/2023	3	Gear Pump Documentation
12/28/2023	3	Gear Pump slicing to print
12/29/2023	2	Gear Pump printing and prep
1/4/2024	2.5	Documentation Update & Team Meeting
1/5/2024	2	Pouring tail into mold
1/7/2024	3	Final Report Outline
1/9/2024	2	Final Report Structuring
1/12/2024	1.5	Final Report Work
1/14/2024	1.5	Weekly Meeting
1/19/2024	4	Meeting with Advisor and Huston, and progress report
1/26/2024	3.5	Testing gear pump, assemblying fish, brainstorming ger pump redesign
2/1/2024	2	Code Research
2/4/2024	2	Team Meeting
2/5/2024	1	Pitch Deck Creation
2/6/2024	0.5	Pitch Deck Recording
2/8/2024	3	Design Review work
2/11/2024	1	Team Meeting
2/23/2024	5	Progress Report Work
2/24/2024	5	Progress Report Work + meeting with Advisor
3/3/2024	3	Final Report Work

3/5/2024	4	Final Report Work
3/6/2024	4	Final Report Work
3/7/2024	4	Final Report Work
3/17/2024	3	Weekly Meeting
3/18/2024	3	Testing and Research for Presentation and Report
3/19/2024	1	Weekly Meeting
3/24/2024	1	Weekly Meeting
3/31/2024	4	Research for Presentation and Report
4/5/2024	4	EXPO Preparation
4/7/2024	5	EXPO Preparation
4/10/2024	3	Final Presentation
4/14/2024	3	Final Presentation
4/15/2024	2	Final Presentation
4/16/2024	2	Final Presentation
4/19/2024	3	Final Report
4/23/2024	3	Final Report

Alec Hjelle

Date	Hours	Description
10/5/2023	2	Weekly meeting
10/12/2023	2	Weekly meeting
10/19/2023	2	Weekly meeting
10/26/2023	3	Tail simulation
11/2/2023	2	Weekly meeting
11/16/2023	2	Weekly Meeting
12/1/2023	2	Meeting with Dieter
12/8/2023	2	meeting/tail analysis
12/13/2023	2	Weekly meeting and sodering/circuit diagram
12/17/2023	1	Proof of Concept for Simulating Fish Tail
1/4/2024	2	Weekly Meeting
1/7/2024	3	coding and testing with Seth - LED and servo testing
1/14/2024	2	Team meeting
1/17/2024	3	temperature coding testing
1/19/2024	1	meeting with Deiter and Huston
1/21/2024	2	Weekly meeting
1/26/2024	4	tail and gear pump testing
1/31/2024	3	innovation challenge
2/4/2024	2	Weekly meeting
2/10/2024	2	gear pump test

2/12/2024	4	Progress report/ Midterm Review Presentation
3/10/2024	2	Weekly Meeting
3/17/2024	3	Weekly Meeting
3/18/2024	3	Testing and Research for Presentation and Report
3/19/2024	2	Weekly Meeting
3/24/2024	2	Weekly Meeting
4/7/2024	4	EXPO Preparation
4/11/2024	2	Final , Testing
4/14/2024	3	Final Presentation
4/15/2024	2	Final Presentation
4/16/2024	2	Final Presentation
4/19/2024	3	Final Report
4/23/2024	3	Final Report

Sarah Hutchins

Date	Hours	Description
10/5/2023	2	Weekly meeting
10/9/2023	4	Gear pump
10/12/2023	2	Weekly meeting
10/16/2023	4	Gear pump simulation
10/19/2023	2	Weekly meeting
10/20/2023	5	Gear pump simulation
10/26/2023	1	Meeting and organization of files
11/2/2023	2	Weekly meeting
11/9/2023	2	Weekly meeting
11/10/2023	4	File organization and modeling of parts
11/11/2023	3	Modeling of body and tail interface washer
11/16/2023	2	Weekly meeting
11/21/2023	3	Modeling fins and organizing space within fish
11/30/2023	2	Weekly meeting
12/1/2023	2	Meeting with Dieter
12/8/2023	2	Weekly meeting
12/13/2023	6	Weekly meeting and sodering/circuit diagram
12/18/2023	2	Making.modeling tail to body adaptor, modeling tail mold
12/21/2023	2	Weekly Meeting
1/2/2024	2	Pouring tail into mold
1/4/2024	2	Weekly Meeting
1/5/2024	2	Pouring tail into mold
1/8/2024	5	Creating and writing progress report, finding bolts and nuts for adaptor
1/9/2024	4	Working on camera pi code and testing camera resolution

1/14/2024	4	Progress Presentation, coding pressure and temperature sensor,
1/19/2024	4	Meeting with Advisor and Huston, and progress report
1/22/2024	2	Gantt Chart and Progress Report
1/26/2024	4	Testing gear pump, assemblying fish, brainstorming gear pump redesign
1/29/2024	2	Progress Report/Presentation
1/9/2024	4	Testing new gear pump
2/12/2024	4	Progress report/ Midterm Review Presentation
3/10/2024	2	Weekly Meeting
3/17/2024	3	Weekly Meeting
3/18/2024	3	Testing and Research for Presentation and Report
3/19/2024	2	Weekly Meeting
3/24/2024	2	Weekly Meeting
3/31/2024	3	Research for Presentation and Report
4/7/2024	4	EXPO Preparation
4/11/2024	2	Final , Testing
4/14/2024	3	Final Presentation
4/15/2024	2	Final Presentation
4/16/2024	2	Final Presentation
4/19/2024	3	Final Report
4/23/2024	3	Final Report

Jonathan Jansen

Date	Hours	Description
10/5/2023	2	Weekly meeting
10/12/2023	2	Weekly meeting
10/19/2023	2	Weekly Meeting
11/2/2023	2	Weekly meeting
11/16/2023	2	Weekly Meeting
11/19/2023	2	Restructured Files Organization and created Slack Channel
11/30/2023	1	Second File Organization Restructuing
12/1/2023	2	Meeting with Dieter
12/21/2023	1	Weekly Meeting - Molding and Crcuit Refresh
12/26/2023	5	3D Printer Nozzle Replacement and General Maintainence (Small Printer)
12/28/2023	3	Prepping 3D Printer for Printing
12/29/2023	1	Beginning 3D Print of Tail Mold
12/31/2023	2	Reworking Fish Body Model
1/1/2023	7	Reworking Fish Body Model and Assembly
1/4/2024	1	Weekly Meeting
1/4/2024	4	Fish Body Re-work
1/6/2024	6	Fish Body -Assembly Verification and Re-work

1/7/2024	8	Fish Body -Assembly Verification and Re-work
1/9/2024	4	Fish Body Details
1/14/2024	2	Team meeting
1/19/2024	1	meeting with Deiter and Huston
1/21/2024	2	Weekly meeting
1/23/2024	3	Ordering and Quoting Hardware/Finalizing Model/Exporting STL's
1/25/2024	3	Fish Model Finalizations and Exports (Camera Bracket, Head, Servo Nutplate)
1/28/2024	4	tail and gear pump modeling
2/3/2024	7	modeling for gear pump implementation into the fish
2/4/2024	2	Weekly meeting
2/9/2024	4	gear assembly test
2/10/2024	2	gear pump test
2/13/2024	2	gear pump
2/14/2024	2	gear pump
2/15/2024	2	gear pump
2/16/2024	2	gear pump
2/17/2024	2	gear pump
2/18/2024	2	gear pump
2/19/2024	2	gear pump
2/20/2024	2	gear pump
2/21/2024	2	gear pump
2/22/2024	2	gear pump
2/23/2024	2	gear pump
2/24/2024	2	gear pump
3/9/2024	5	gear pump
4/4/2024	3	gear pump test
4/11/2024	2	Final Testing
4/14/2024	3	Final Presentation
4/15/2024	2	Final Presentation
4/16/2024	2	Final Presentation

Seth Roetenberger

Date	Hours	Description
10/5/2023	2	Weekly meeting
10/9/2023	4	Tail
10/12/2023	2	Weekly meeting
10/16/2023	4	Tail
10/19/2023	2	Weekly meeting
10/20/2023	5	Tail simulation
10/26/2023	3	Tail simulation

11/2/2023	2	Weekly meeting
11/9/2023	2	Weekly meeting
11/10/2023	4	Modeling of body
11/11/2023	3	Modeling of body
11/12/2023	3	Modeling of body
11/13/2023	3	Modeling of body
11/14/2023	3	Modeling of body
11/15/2023	3	Modeling of body
11/16/2023	2	Weekly meeting
11/21/2023	3	Modeling fins and organizing space within fish
11/23/2023	5	Modeling fins and organizing space within fish
11/30/2023	2	Weekly meeting
12/1/2023	5	meeting/sensor research
12/3/2023	1	Setup Pi
12/4/2023	6	Body Modeling/Sensor research/purchases
12/5/2023	3	Body Modeling/Sensor research/purchases
12/8/2023	6	meeting/tail analysis
12/9/2023	1	Tail simulation
12/10/2023	5	sensor/body modeling and simulation
12/11/2023	2	sensor integration
12/13/2023	6	Weekly meeting and sodering/circuit diagram
12/14/2023	4	Tail equation derivation
12/15/2023	4	Tail simulation tests
12/16/2023	3	Tail simulation tests
12/17/2023	2	Tail simulation tests
12/18/2023	1	coding research
12/18-27/2023	10	enabling VNC remote desktop to pi
12/29/2023	8	getting the motor running
1/2/2024	2	Pouring tail into mold
1/4/2024	2	Weekly Meeting
1/5/2024	2	Pouring tail into mold
1/6/2024	3	accelerometer coding
1/7/2024	3	coding and testing with alec - LED and servo testing
1/8/2024	3	accelerometer coding
1/9/2024	5	camera coding
1/11/2024	2	MCP3008 coding
1/14/2024	2	Team meeting
1/15/2024	2	Servo coding
1/16/2024	4	coding pressure and temperature sensor, and glueing silione tail together
1/17/2024	3	temperature coding testing
1/18/2024	2	pressure sensor testing

1/19/2024	1	meeting with Deiter and Huston
1/21/2024	2	Weekly meeting
1/23/2024	2	motor coding setup
1/24/2024	1	exporting files and printing
1/25/2024	2	pressure and temperature readings stored in csv file
1/26/2024	4	tail and gear pump testing
1/28/2024	4	tail and gear pump modeling
1/31/2024	3	innovation challenge
2/1/2024	2	ESC coding
2/2/2024	8	Tail simulation
2/4/2024	2	Weekly meeting
2/5/2024	3	innovation challenge presentation and pelvic fin modeling
2/6/2024	1	presenting/printing
2/7/2024	1	gear assembly
2/9/2024	4	gear assembly test
2/10/2024	2	gear pump test
2/12/2024	1	gear enclosure redesign
2/13/2024	2	geap pump
2/14/2024	2	geap pump
2/15/2024	2	geap pump
2/16/2024	2	geap pump
2/17/2024	2	geap pump
2/18/2024	2	geap pump
2/19/2024	2	geap pump
2/20/2024	2	geap pump
2/21/2024	2	geap pump
2/22/2024	2	geap pump
2/23/2024	2	geap pump
2/24/2024	2	geap pump
3/1/2024	3	gasket dxf files
3/5/2024	4	coding
3/6/2024	2	coding
3/7/2024	2	coding
3/8/2024	2	coding
3/9/2024	5	gear pump
3/26/2024	1	inovation challenege
4/2/2024	2	coding motor driver
4/3/2024	3	coding buttons
4/4/2024	7	wiring together and gear pump test
4/6/2024	2	coding
4/7/2024	10	tail casting

4/8/2024	7	coding, tail, and assembly
4/11/2024	2	Final , Testing
4/14/2024	3	Final Presentation
4/15/2024	2	Final Presentation
4/16/2024	2	Final Presentation

Pi Code

Button Control

```
# safe_restart_shutdown_Pi.py
```

```
#
# ------------------------------------------------------------
--------------------
#                 Raspberry Pi Safe Restart and Shutdown
Python Script
# ------------------------------------------------------------
--------------------
# WRITTEN BY: Ho Yun "Bobby" Chan
# @ SparkFun Electronics
# DATE: 3/31/2020
#
# Based on code from the following blog and tutorials:
#
#    Kevin Godden
#
https://www.ridgesolutions.ie/index.php/2013/02/22/raspberr
y-pi-restart-shutdown-your-pi-from-python-code/
#
#    Pete Lewis
#    https://learn.sparkfun.com/tutorials/raspberry-pi-
stand-alone-programmer#resources-and-going-further
#
#    Shawn Hymel
#    https://learn.sparkfun.com/tutorials/python-
programming-tutorial-getting-started-with-the-raspberry-
pi/experiment-1-digital-input-and-output
#
# ==================== DESCRIPTION ====================
#
# This python script takes advantage of the Qwiic pHat
v2.0's
```

```
# built-in general purpose button to safely reboot/shutdown
you Pi:

#

#    1.) If you press the button momentarily, the Pi will
reboot.

#    2.) Holding down the button for about 3 seconds the Pi
will shutdown.

#

# ========== TUTORIAL ==========

#  For more information on running this script on startup,

#  check out the associated tutorial to adjust your
"rc.local" file:

#

#        https://learn.sparkfun.com/tutorials/raspberry-pi-
safe-reboot-and-shutdown-button

#

# ========== PRODUCTS THAT USE THIS CODE ==========

#

#   Feel like supporting our work? Buy a board from
SparkFun!

#

#        Qwiic pHAT v2.0

#        https://www.sparkfun.com/products/15945

#

#   You can also use any button but you would need to wire
it up

#   instead of stacking the pHAT on your Pi.

#

# LICENSE: This code is released under the MIT License
(http://opensource.org/licenses/MIT)

#
```

```
# Distributed as-is; no warranty is given
#
# ------------------------------------------------------------
--------------------

import time
import RPi.GPIO as GPIO
from time import sleep
from picamera import PiCamera

camera = PiCamera()



# Pin definition
reset_shutdown_pin = 17
yellow_pin = 22
yellowLED = 23
redLED = 27

# Suppress warnings
GPIO.setwarnings(False)

# Use "GPIO" pin numbering
GPIO.setmode(GPIO.BCM)

# Use built-in internal pullup resistor so the pin is not
floating
# if using a momentary push button without a resistor.
GPIO.setup(reset_shutdown_pin, GPIO.IN,
pull_up_down=GPIO.PUD_UP)
```

```
GPIO.setup(yellow_pin, GPIO.IN, pull_up_down=GPIO.PUD_UP)

GPIO.setup(yellowLED, GPIO.OUT)

GPIO.setup(redLED, GPIO.OUT)


# Use Qwiic pHAT's pullup resistor so that the pin is not
floating

#GPIO.setup(reset_shutdown_pin, GPIO.IN)


camera.start_recording('/home/pi/Desktop/video.h264')

GPIO.output(yellowLED,GPIO.HIGH)

GPIO.output(redLED,GPIO.HIGH)



# modular function to restart Pi

def restart():

    print("restarting Pi")

    command = "/usr/bin/sudo /sbin/shutdown -r now"

    import subprocess

    process = subprocess.Popen(command.split(),
stdout=subprocess.PIPE)

    output = process.communicate()[0]

    print(output)


# modular function to shutdown Pi

def shut_down():

    print("shutting down")

    command = "/usr/bin/sudo /sbin/shutdown -h now"

    import subprocess

    process = subprocess.Popen(command.split(),
stdout=subprocess.PIPE)
```

```
    output = process.communicate()[0]
    print(output)


def button_press():


while True:
    #short delay, otherwise this code will take up a lot of
the Pi's processing power
    time.sleep(0.5)


    # For troubleshooting, uncomment this line to output
button status on command line
    #print('GPIO state is = ",
GPIO.input(reset_shutdown_pin))
    if GPIO.input(reset_shutdown_pin) == False:
        counter = 0


        while GPIO.input(reset_shutdown_pin) == False:
            #For troubleshooting, uncomment this line to
view the counter. If it reaches a value above 4, we will
restart.
            #print(counter)
            counter += 1
            time.sleep(0.5)


            # long button press
            if counter > 4:
                camera.stop_recording()
                sleep(5)
                GPIO.output(redLED,GPIO.LOW)
```

```
                shut_down()

        #if short button press, restart!
        restart()
```

Motor

```
import RPi.GPIO as GPIO
from time import sleep

from gpiozero import Servo

from gpiozero.pins.pigpio import PiGPIOFactory

factory = PiGPIOFactory()

servoLeft = Servo(12, min_pulse_width=0.0005,
max_pulse_width=0.0025, pin_factory=factory)
servoRight = Servo(13, min_pulse_width=0.0005,
max_pulse_width=0.0025, pin_factory=factory)

servoLeft.value=0
servoRight.value=0

ENA = 16
IN1 = 20
IN2 = 21

GPIO.setmode(GPIO.BCM)
GPIO.setwarnings(False)
GPIO.setup(ENA,GPIO.OUT)
```

```
GPIO.setup(IN1,GPIO.OUT)
GPIO.setup(IN2,GPIO.OUT)
pwm = GPIO.PWM(ENA,100)
pwm.start(0)

def left():
    servoLeft.value=30/180
    servoRight.value=-30/180
    sleep(2)

def right():
    servoLeft.value=-30/180
    servoRight.value=30/180
    sleep(2)

def forward():
    GPIO.output(IN1,GPIO.LOW)
    GPIO.output(IN2,GPIO.HIGH)
    pwm.ChangeDutyCycle(95)
    sleep(2)


def backward():
    GPIO.output(IN1,GPIO.HIGH)
    GPIO.output(IN2,GPIO.LOW)
    pwm.ChangeDutyCycle(5)
    sleep(2)
```

```
while True:
    forward()
    backward()
    #left()
    #right()
```

Sensors

```
import os
import glob
import time
import datetime

# SPDX-FileCopyrightText: 2021 ladyada for Adafruit
Industries
# SPDX-License-Identifier: MIT

import busio
import digitalio
import board
import adafruit_mcp3xxx.mcp3008 as MCP
from adafruit_mcp3xxx.analog_in import AnalogIn

# create the spi bus
spi = busio.SPI(clock=board.SCK, MISO=board.MISO,
MOSI=board.MOSI)

# create the cs (chip select)
cs = digitalio.DigitalInOut(board.D5)
```

```
# create the mcp object
mcp = MCP.MCP3008(spi, cs)

# create an analog input channel on pin 0
chan = AnalogIn(mcp, MCP.P0)



os.system('modprobe w1-gpio')
os.system('modprobe w1-therm')

base_dir = '/sys/bus/w1/devices/'
device_folder = glob.glob(base_dir + '28-3ce1d458f6c0')[0]
device_file = device_folder + '/w1_slave'

def read_pressure():
    pres = float(1.8811*chan.value+81682) #pressure in
pascals
    depth = float(pres-101325)/(9.81*1000) #depth in meters
    return pres, depth

def read_temp_raw():
    f = open(device_file, 'r')
    lines = f.readlines()
    f.close()
    return lines

def read_temp():
    lines = read_temp_raw()
    while lines[0].strip()[-3:] != 'YES':
```

```
        time.sleep(0.2)
        lines = read_temp_raw()
    equals_pos = lines[1].find('t=')
    if equals_pos != -1:
        temp_string = lines[1][equals_pos+2:]
        temp_c = float(temp_string) / 1000.0
        temp_f = temp_c * 9.0 / 5.0 + 32.0
        return temp_c, temp_f


while True:
    dtime = datetime.datetime.now()
    mydate = str(dtime.date())    #get date in one
variable, in text format
    mytime = str(dtime.time())    #get time in one
variable, in text format
    a = read_temp()    #get temperature value
    b = read_pressure()
    print(a[0])
    print(b[0])
    mylog = open('log.csv','a')
    mystr = mydate + "," +  mytime + "," + str(a[0]) + ","
+ str(a[1]) + "," + str(b[0]) + "," + str(b[1]) + "\n"
    #print(mystr)
    mylog.write(mystr)
    mylog.close()
    time.sleep(1)
```

Camera

```
#Python Code for Camera, Raspberry Pi
```

```
#Resource:
https://projects.raspberrypi.org/en/projects/getting-
started-with-picamera/7


#_____________________________________________________
#Capture 1 Photo
from picamera import PiCamera


from time import sleep
camera = PiCamera()


camera.capture('/home/pi/Desktop/image.jpg')



#_____________________________________________________
#Capture 5 Photos
from picamera import PiCamera


from time import sleep
camera = PiCamera()


for in range(5):
sleep(5)
camera.capture('/home/pi/Desktop/image%s.jpg'%i)



#_____________________________________________________
#Video Record
from picamera import PiCamera
```

```
from time import sleep
camera = PiCamera()

camera.start_recording('/home/pi/Desktop/video.h264')
sleep(5)
camera.stop_recording()

#_____________________________________________________
#Resolution
    #File Properties @base resolution(1920,1080):1.60MB
    #                @min resolution     (64,64):43.10KB
    #                @                (800, 600):603KB
    #want to get best resolution given MB we hv
    #Max Resolution/of Seth's Monitor: 1920x1080



from picamera import PiCamera
from time import sleep
camera = PiCamera()

camera.resolution = (1920,1944) #resolution
camera.start_recording('/home/pi/Desktop/video.h264')
#record
sleep(5) #record for 5 seconds
camera.stop_recording() #stop recording


#Notes:
    #Took pi and camera, placed in tupperware and placed
then in water to test what best resolution to set to record
video
```

```
    #Played around with 2 different camera, decided becasue
one was manually focused and wouldn't be applicable
```

**********End of Report**********